Bid Number/बोली क्रमांक (बिड संख्या):
GEM/2023/B/3308439
Dated/दिनांक : 27-03-2023

Bid Document/ बिड दस्तावेज़

Bid Details/बिड विवरण	
Bid End Date/Time/बिड बंद होने की तारीख/समय	10-04-2023 16:00:00
Bid Opening Date/Time/बिड खुलने की तारीख/समय	10-04-2023 16:30:00
Bid Offer Validity (From End Date)/बिड पेशकश वैधता (बंद होने की तारीख से)	60 (Days)
Ministry/State Name/मंत्रालय/राज्य का नाम	Ministry Of Chemicals And Fertilizers
Department Name/विभाग का नाम	Department Of Chemicals And Petrochemicals
Organisation Name/संगठन का नाम	Hindustan Organic Chemicals Limited
Office Name/कार्यालय का नाम	Ambalamugal,ernakulam
Total Quantity/कुल मात्रा	141
Item Category/मद केटेगरी	NDE SHAFT SLEEVE FOR P 2005 , DE SHAFT SLEEVE FOR P 2005 , MECHANICAL SEAL ASSEMBLY COMPLETE FOR P 2008 , SEAL RING TC FOR P 2008 , CARBON INSERT NO 5 FOR P 2008 , SEAL RING TC FOR P 2501 , CARBON INSERT NO 5 FOR P 2501 , MECHANICAL SEAL ASSEMBLY COMPLETE FOR P 2501 , MECHANICAL SEAL ASSEMBLY COMPLETE FOR P 3001 P3002 P 6501 , SEAL RING TC FOR P 3001 P3002 P 6501 , SEAL RING SILICON CARBIDE FOR P 3001 P3002 P 6501 , SHAFT PACKING DURAFLON FOR 3001 P3002 P 6501 , SHAFT PACKING DURAFLON FOR P3004 P 3005 P 3501 , SHAFT SLEEVE SS316 FOR P3004 P 3005 P 3501 , SEAL RING TC FOR P3004 P 3005 P 3501 , SHAFT SLEEVE FOR P 3006 , MECH. SEAL ASSEMBLY COMPLETE FOR P 3006 , SEAL RING TC FOR P 3006 , SEAL RING TC FOR P 6001 , SHAFT SLEEVE FOR 33 P 001 A , CARBON INSERT NO 5 FOR 101 P 002 , SEAL RING TC FOR 101 P 002 , SHAFT PACKING VITON FOR 101 P 002 , MECH. SEAL ASSEMBLY COMPLETE FOR 101 P 002 , MECHANICAL SEAL RING TC FOR 102 P 001 , CARBON INSERT NO 5 FOR 102 P 001 , ROTARY ASSEMBLY COMPLETE FOR P 3007 P 3505
BOQ Title/बीओक्यू शीर्षक	MECHANICAL SEAL SPARES FOR DURAMETALLIC SEALS
Years of Past Experience Required for same/similar service/उन्हीं/समान सेवाओं के लिए अपेक्षित विगत अनुभव के वर्ष	3 Year (s)
MSE Exemption for Years Of Experience/वर्षों के अनुभव के लिए एमएसई को छूट प्राप्त है and Turnover/टर्नओवर के लिए एमएसई को छूट प्राप्त है	Yes

Bid Details/बिड विवरण	
Startup Exemption for Years Of Experience/ वर्षों के अनुभव के लिए स्टार्टअप को छूट प्राप्त है and Turnover/ टर्नओवर के लिए स्टार्टअप को छूट प्राप्त है	Yes
Document required from seller/विक्रेता से मांगे गए दस्तावेज़	Experience Criteria,Past Performance,Additional Doc 1 (Requested in ATC),Compliance of BoQ specification and supporting document *In case any bidder is seeking exemption from Experience / Turnover Criteria, the supporting documents to prove his eligibility for exemption must be uploaded for evaluation by the buyer
Past Performance/विगत प्रदर्शन	80 %
Bid to RA enabled/बिड से रिवर्स नीलामी सक्रिय किया	No
Type of Bid/बिड का प्रकार	Two Packet Bid
Primary product category	NDE SHAFT SLEEVE FOR P 2005
Time allowed for Technical Clarifications during technical evaluation/तकनीकी मूल्यांकन के दौरान तकनीकी स्पष्टीकरण हेतु अनुमत समय	2 Days
Evaluation Method/मूल्यांकन पद्धति	Group wise evaluation

EMD Detail/ईएमडी विवरण

Required/आवश्यकता	No

ePBG Detail/ईपीबीजी विवरण

Required/आवश्यकता	No

Splitting/विभाजन

Bid splitting not applied/बोली विभाजन लागू नहीं किया गया.

MII Purchase Preference/एमआईआई खरीद वरीयता

MII Purchase Preference/एमआईआई खरीद वरीयता	Yes

MSE Purchase Preference/एमएसई खरीद वरीयता

MSE Purchase Preference/एमएसई खरीद वरीयता	Yes

1. If the bidder is a Micro or Small Enterprise as per latest definitions under MSME rules, the bidder shall be exempted from the requirement of "Bidder Turnover" criteria and "Experience Criteria" subject to meeting of quality and technical specifications. If the bidder is OEM of the offered products, it would be exempted from the "OEM Average Turnover" criteria also subject to meeting of quality and technical specifications. In case any bidder is seeking exemption from Turnover / Experience Criteria, the supporting documents to prove his eligibility for exemption must be uploaded for evaluation by the buyer.
2. If the bidder is a Startup, the bidder shall be exempted from the requirement of "Bidder Turnover" criteria and "Experience Criteria" subject to their meeting of quality and technical specifications. If the bidder is OEM of the offered products, it would be exempted from the "OEM Average Turnover" criteria also subject to meeting of quality and technical specifications. In case any bidder is seeking exemption from Turnover / Experience Criteria, the supporting documents to prove his eligibility for exemption must be uploaded for evaluation by the buyer.
3. Experience Criteria: In respect of the filter applied for experience criteria, the Bidder or its OEM {themselves or through reseller(s)} should have regularly, manufactured and supplied same or similar Category Products to any Central / State Govt Organization / PSU / Public Listed Company for number of Financial years as indicated above in the bid document before the bid opening date. Copies of relevant contracts to be submitted along with bid in support of having supplied some quantity during each of the Financial year. In case of bunch bids, the category of primary product having highest value should meet this criterion.
4. Preference to Make In India products (For bids < 200 Crore):Preference shall be given to Class 1 local supplier as defined in public procurement (Preference to Make in India), Order 2017 as amended from time to time and its subsequent Orders/Notifications issued by concerned Nodal Ministry for specific Goods/Products. The minimum local content to qualify as a Class 1 local supplier is denoted in the bid document. If the bidder wants to avail the Purchase preference, the bidder must upload a certificate from the OEM regarding the percentage of the local content and the details of locations at which the local value addition is made along with their bid, failing which no purchase preference shall be granted. In case the bid value is more than Rs 10 Crore, the declaration relating to percentage of local content shall be certified by the statutory auditor or cost auditor, if the OEM is a company and by a practicing cost accountant or a chartered accountant for OEMs other than companies as per the Public Procurement (preference to Make-in -India) order 2017 dated 04.06.2020. Only Class-I and Class-II Local suppliers as per MII order dated 4.6.2020 will be eligible to bid. Non - Local suppliers as per MII order dated 04.06.2020 are not eligible to participate. However, eligible micro and small enterprises will be allowed to participate .In case Buyer has selected Purchase preference to Micro and Small Enterprises clause in the bid, the same will get precedence over this clause.
5. Purchase preference to Micro and Small Enterprises (MSEs): Purchase preference will be given to MSEs as defined in Public Procurement Policy for Micro and Small Enterprises (MSEs) Order, 2012 dated 23.03.2012 issued by Ministry of Micro, Small and Medium Enterprises and its subsequent Orders/Notifications issued by concerned Ministry. If the bidder wants to avail the Purchase preference, the bidder must be the manufacturer of the offered product in case of bid for supply of goods. Traders are excluded from the purview of Public Procurement Policy for Micro and Small Enterprises. In respect of bid for Services, the bidder must be the Service provider of the offered Service. Relevant documentary evidence in this regard shall be uploaded along with the bid in respect of the offered product or service. If L-1 is not an MSE and MSE Seller (s) has/have quoted price within L-1+ 15% (Selected by Buyer)of margin of purchase preference /price band defined in relevant policy, such Seller shall be given opportunity to match L-1 price and contract will be awarded for 25%(selected by Buyer) percentage of total QUANTITY.
6. Estimated Bid Value indicated above is being declared solely for the purpose of guidance on EMD amount and for determining the Eligibility Criteria related to Turn Over, Past Performance and Project / Past Experience etc. This has no relevance or bearing on the price to be quoted by the bidders and is also not going to have any impact on bid participation. Also this is not going to be used as a criteria in determining reasonableness of quoted prices which would be determined by the buyer based on its own assessment of reasonableness and based on competitive prices received in Bid / RA process.
7. Past Performance: The Bidder or its OEM {themselves or through re-seller(s)} should have supplied same or similar Category Products for 80% of bid quantity, in at least one of the last three Financial years before the bid opening date to any Central / State Govt Organization / PSU / Public Listed Company. Copies of relevant contracts (proving supply of cumulative order quantity in any one financial year) to be submitted along with bid in support of quantity supplied in the relevant Financial year. In case of bunch bids, the category related to primary product having highest bid value should meet this criterion.

Evaluation Method (Group Wise Evaluation Method)

Contract will be awarded schedulewise and the determination of L1 will be done separately for each schedule. The details of item-consignee combination covered under each schedule are as under:

Evaluation Schedules	Item/Category	Consignee/ Reporting Officer	Consignee Address	Quantity
P 2005 A/B	Nde Shaft Sleeve For P 2005	UNNIMAYA K P	HINDUSTAN ORGANIC CHEMICALS LTD, AMBALAMUGAL ERNAKULAM 682302	2
	De Shaft Sleeve For P 2005	UNNIMAYA K P	HINDUSTAN ORGANIC CHEMICALS LTD, AMBALAMUGAL ERNAKULAM 682302	2
P 2008 A/B	Mechanical Seal Assembly Complete For P 2008	UNNIMAYA K P	HINDUSTAN ORGANIC CHEMICALS LTD, AMBALAMUGAL ERNAKULAM 682302	4
	Seal Ring Tc For P 2008	UNNIMAYA K P	HINDUSTAN ORGANIC CHEMICALS LTD, AMBALAMUGAL ERNAKULAM 682302	4
	Carbon Insert No 5 For P 2008	UNNIMAYA K P	HINDUSTAN ORGANIC CHEMICALS LTD, AMBALAMUGAL ERNAKULAM 682302	8
P 2501 A/B	Seal Ring Tc For P 2501	UNNIMAYA K P	HINDUSTAN ORGANIC CHEMICALS LTD, AMBALAMUGAL ERNAKULAM 682302	6
	Carbon Insert No 5 For P 2501	UNNIMAYA K P	HINDUSTAN ORGANIC CHEMICALS LTD, AMBALAMUGAL ERNAKULAM 682302	8
	Mechanical Seal Assembly Complete For P 2501	UNNIMAYA K P	HINDUSTAN ORGANIC CHEMICALS LTD, AMBALAMUGAL ERNAKULAM 682302	3
P 3001 A/B, P 3002 A/B & P 6501 A/B	Mechanical Seal Assembly Complete For P 3001 P3002 P 6501	UNNIMAYA K P	HINDUSTAN ORGANIC CHEMICALS LTD, AMBALAMUGAL ERNAKULAM 682302	4
	Seal Ring Tc For P 3001 P3002 P 6501	UNNIMAYA K P	HINDUSTAN ORGANIC CHEMICALS LTD, AMBALAMUGAL ERNAKULAM 682302	4
	Seal Ring Silicon Carbide For P 3001 P3002 P 6501	UNNIMAYA K P	HINDUSTAN ORGANIC CHEMICALS LTD, AMBALAMUGAL ERNAKULAM 682302	4
	Shaft Packing Duraflon For 3001 P3002 P 6501	UNNIMAYA K P	HINDUSTAN ORGANIC CHEMICALS LTD, AMBALAMUGAL ERNAKULAM 682302	10
P 3004 A/B, P 3005 A/B, P 3501 A/B, P 4502 A/B & P 4504 A/B	Shaft Packing Duraflon For P3004 P 3005 P 3501	UNNIMAYA K P	HINDUSTAN ORGANIC CHEMICALS LTD, AMBALAMUGAL ERNAKULAM 682302	16
	Shaft Sleeve Ss316 For P3004 P 3005 P 3501	UNNIMAYA K P	HINDUSTAN ORGANIC CHEMICALS LTD, AMBALAMUGAL ERNAKULAM 682302	4
	Seal Ring Tc For P3004 P 3005 P 3501	UNNIMAYA K P	HINDUSTAN ORGANIC CHEMICALS LTD, AMBALAMUGAL ERNAKULAM 682302	10

P 3006 A/B	Shaft Sleeve For P 3006	UNNIMAYA K P	HINDUSTAN ORGANIC CHEMICALS LTD, AMBALAMUGAL ERNAKULAM 682302	2
	Mech. Seal Assembly Complete For P 3006	UNNIMAYA K P	HINDUSTAN ORGANIC CHEMICALS LTD, AMBALAMUGAL ERNAKULAM 682302	2
	Seal Ring Tc For P 3006	UNNIMAYA K P	HINDUSTAN ORGANIC CHEMICALS LTD, AMBALAMUGAL ERNAKULAM 682302	4
P 6001 A/B	Seal Ring Tc For P 6001	UNNIMAYA K P	HINDUSTAN ORGANIC CHEMICALS LTD, AMBALAMUGAL ERNAKULAM 682302	4
33 P 001 A/B	Shaft Sleeve For 33 P 001 A	UNNIMAYA K P	HINDUSTAN ORGANIC CHEMICALS LTD, AMBALAMUGAL ERNAKULAM 682302	2
101 P 002 A/B	Carbon Insert No 5 For 101 P 002	UNNIMAYA K P	HINDUSTAN ORGANIC CHEMICALS LTD, AMBALAMUGAL ERNAKULAM 682302	4
	Seal Ring Tc For 101 P 002	UNNIMAYA K P	HINDUSTAN ORGANIC CHEMICALS LTD, AMBALAMUGAL ERNAKULAM 682302	4
	Shaft Packing Viton For 101 P 002	UNNIMAYA K P	HINDUSTAN ORGANIC CHEMICALS LTD, AMBALAMUGAL ERNAKULAM 682302	10
	Mech. Seal Assembly Complete For 101 P 002	UNNIMAYA K P	HINDUSTAN ORGANIC CHEMICALS LTD, AMBALAMUGAL ERNAKULAM 682302	2
102 P 001 A/B & 102 P 003 A/B	Mechanical Seal Ring Tc For 102 P 001	UNNIMAYA K P	HINDUSTAN ORGANIC CHEMICALS LTD, AMBALAMUGAL ERNAKULAM 682302	4
	Carbon Insert No 5 For 102 P 001	UNNIMAYA K P	HINDUSTAN ORGANIC CHEMICALS LTD, AMBALAMUGAL ERNAKULAM 682302	6
P 2504 A/B	Carbon Insert No 5 For P 2501	UNNIMAYA K P	HINDUSTAN ORGANIC CHEMICALS LTD, AMBALAMUGAL ERNAKULAM 682302	4
P 3007 A/B, P 3505, P 4012 A/B & P 4514 A/B	Rotary Assembly Complete For P 3007 P 3505	UNNIMAYA K P	HINDUSTAN ORGANIC CHEMICALS LTD, AMBALAMUGAL ERNAKULAM 682302	4

NDE SHAFT SLEEVE FOR P 2005

(Minimum 50% and 20% Local Content required for qualifying as Class 1 and Class 2 Local Supplier respectively/क्रमशः श्रेणी 1 और श्रेणी 2 के स्थानीय आपूर्तिकर्ता के रूप में अर्हता प्राप्त करने के लिए आवश्यक)

Brand Type/ब्रांड का प्रकार	Unbranded

Technical Specifications/तकनीकी विशिष्टियाँ

Specification Document	View File

BOQ Detail Document	View File

Advisory-Please refer attached BOQ document for detailed consignee list and delivery period.

Consignees/Reporting Officer/परेषिती/रिपोर्टिंग अधिकारी and/ तथा Quantity/मात्रा

S.No./क्र. सं.	Consignee Reporting/Officer/ परेषिती/रिपोर्टिंग अधिकारी	Address/पता	Quantity/मात्रा	Delivery Days/डिलीवरी के दिन
1	UNNIMAYA K P	682302,HINDUSTAN ORGANIC CHEMICALS LTD, AMBALAMUGAL ERNAKULAM	2	30

DE SHAFT SLEEVE FOR P 2005

(Minimum 50% and 20% Local Content required for qualifying as Class 1 and Class 2 Local Supplier respectively/क्रमशः श्रेणी 1 और श्रेणी 2 के स्थानीय आपूर्तिकर्ता के रूप में अर्हता प्राप्त करने के लिए आवश्यक)

Brand Type/ब्रांड का प्रकार	Unbranded

Technical Specifications/तकनीकी विशिष्टियाँ

Specification Document	View File
BOQ Detail Document	View File

Advisory-Please refer attached BOQ document for detailed consignee list and delivery period.

Consignees/Reporting Officer/परेषिती/रिपोर्टिंग अधिकारी and/ तथा Quantity/मात्रा

S.No./क्र. सं.	Consignee Reporting/Officer/ परेषिती/रिपोर्टिंग अधिकारी	Address/पता	Quantity/मात्रा	Delivery Days/डिलीवरी के दिन

S.No./क्र. सं.	Consignee Reporting/Officer/ परेषिती/रिपोर्टिंग अधिकारी	Address/पता	Quantity/मात्रा	Delivery Days/डिलीवरी के दिन
1	UNNIMAYA K P	682302,HINDUSTAN ORGANIC CHEMICALS LTD, AMBALAMUGAL ERNAKULAM	2	30

MECHANICAL SEAL ASSEMBLY COMPLETE FOR P 2008

(Minimum 50% and 20% Local Content required for qualifying as Class 1 and Class 2 Local Supplier respectively/क्रमशः श्रेणी 1 और श्रेणी 2 के स्थानीय आपूर्तिकर्ता के रूप में अर्हता प्राप्त करने के लिए आवश्यक)

Brand Type/ब्रांड का प्रकार	Unbranded

Technical Specifications/तकनीकी विशिष्टियाँ

Specification Document	View File
BOQ Detail Document	View File

Advisory-Please refer attached BOQ document for detailed consignee list and delivery period.

Consignees/Reporting Officer/परेषिती/रिपोर्टिंग अधिकारी and/ तथा Quantity/मात्रा

S.No./क्र. सं.	Consignee Reporting/Officer/ परेषिती/रिपोर्टिंग अधिकारी	Address/पता	Quantity/मात्रा	Delivery Days/डिलीवरी के दिन
1	UNNIMAYA K P	682302,HINDUSTAN ORGANIC CHEMICALS LTD, AMBALAMUGAL ERNAKULAM	4	30

SEAL RING TC FOR P 2008

(Minimum 50% and 20% Local Content required for qualifying as Class 1 and Class 2 Local Supplier respectively/क्रमशः श्रेणी 1 और श्रेणी 2 के स्थानीय आपूर्तिकर्ता के रूप में अर्हता प्राप्त करने के लिए आवश्यक)

Brand Type/ब्रांड का प्रकार	Unbranded

Technical Specifications/तकनीकी विशिष्टियाँ

Specification Document	View File

BOQ Detail Document	View File

Advisory-Please refer attached BOQ document for detailed consignee list and delivery period.

Consignees/Reporting Officer/परेषिती/रिपोर्टिंग अधिकारी and/ तथा Quantity/मात्रा

S.No./क्र. सं.	Consignee Reporting/Officer/ परेषिती/रिपोर्टिंग अधिकारी	Address/पता	Quantity/मात्रा	Delivery Days/डिलीवरी के दिन
1	UNNIMAYA K P	682302,HINDUSTAN ORGANIC CHEMICALS LTD, AMBALAMUGAL ERNAKULAM	4	30

CARBON INSERT NO 5 FOR P 2008

(Minimum 50% and 20% Local Content required for qualifying as Class 1 and Class 2 Local Supplier respectively/क्रमशः श्रेणी 1 और श्रेणी 2 के स्थानीय आपूर्तिकर्ता के रूप में अर्हता प्राप्त करने के लिए आवश्यक)

Brand Type/ब्रांड का प्रकार	Unbranded

Technical Specifications/तकनीकी विशिष्टियाँ

Specification Document	View File
BOQ Detail Document	View File

Advisory-Please refer attached BOQ document for detailed consignee list and delivery period.

Consignees/Reporting Officer/परेषिती/रिपोर्टिंग अधिकारी and/ तथा Quantity/मात्रा

S.No./क्र. सं.	Consignee Reporting/Officer/ परेषिती/रिपोर्टिंग अधिकारी	Address/पता	Quantity/मात्रा	Delivery Days/डिलीवरी के दिन

S.No./क्र. सं.	Consignee Reporting/Officer/ परेषिती/रिपोर्टिंग अधिकारी	Address/पता	Quantity/मात्रा	Delivery Days/डिलीवरी के दिन
1	UNNIMAYA K P	682302,HINDUSTAN ORGANIC CHEMICALS LTD, AMBALAMUGAL ERNAKULAM	8	30

SEAL RING TC FOR P 2501

(Minimum 50% and 20% Local Content required for qualifying as Class 1 and Class 2 Local Supplier respectively/क्रमशः श्रेणी 1 और श्रेणी 2 के स्थानीय आपूर्तिकर्ता के रूप में अर्हता प्राप्त करने के लिए आवश्यक)

Brand Type/ब्रांड का प्रकार	Unbranded

Technical Specifications/तकनीकी विशिष्टियाँ

Specification Document	View File
BOQ Detail Document	View File

Advisory-Please refer attached BOQ document for detailed consignee list and delivery period.

Consignees/Reporting Officer/परेषिती/रिपोर्टिंग अधिकारी and/ तथा Quantity/मात्रा

S.No./क्र. सं.	Consignee Reporting/Officer/ परेषिती/रिपोर्टिंग अधिकारी	Address/पता	Quantity/मात्रा	Delivery Days/डिलीवरी के दिन
1	UNNIMAYA K P	682302,HINDUSTAN ORGANIC CHEMICALS LTD, AMBALAMUGAL ERNAKULAM	6	30

CARBON INSERT NO 5 FOR P 2501

(Minimum 50% and 20% Local Content required for qualifying as Class 1 and Class 2 Local Supplier respectively/क्रमशः श्रेणी 1 और श्रेणी 2 के स्थानीय आपूर्तिकर्ता के रूप में अर्हता प्राप्त करने के लिए आवश्यक)

Brand Type/ब्रांड का प्रकार	Unbranded

Technical Specifications/तकनीकी विशिष्टियाँ

Specification Document	View File

BOQ Detail Document	View File

Advisory-Please refer attached BOQ document for detailed consignee list and delivery period.

Consignees/Reporting Officer/परेषिती/रिपोर्टिंग अधिकारी and/ तथा Quantity/मात्रा

S.No./क्र. सं.	Consignee Reporting/Officer/ परेषिती/रिपोर्टिंग अधिकारी	Address/पता	Quantity/मात्रा	Delivery Days/डिलीवरी के दिन
1	UNNIMAYA K P	682302,HINDUSTAN ORGANIC CHEMICALS LTD, AMBALAMUGAL ERNAKULAM	8	30

MECHANICAL SEAL ASSEMBLY COMPLETE FOR P 2501

(Minimum 50% and 20% Local Content required for qualifying as Class 1 and Class 2 Local Supplier respectively/क्रमशः श्रेणी 1 और श्रेणी 2 के स्थानीय आपूर्तिकर्ता के रूप में अर्हता प्राप्त करने के लिए आवश्यक)

Brand Type/ब्रांड का प्रकार	Unbranded

Technical Specifications/तकनीकी विशिष्टियाँ

Specification Document	View File
BOQ Detail Document	View File

Advisory-Please refer attached BOQ document for detailed consignee list and delivery period.

Consignees/Reporting Officer/परेषिती/रिपोर्टिंग अधिकारी and/ तथा Quantity/मात्रा

S.No./क्र. सं.	Consignee Reporting/Officer/ परेषिती/रिपोर्टिंग अधिकारी	Address/पता	Quantity/मात्रा	Delivery Days/डिलीवरी के दिन

S.No./क्र. सं.	Consignee Reporting/Officer/ परेषिती/रिपोर्टिंग अधिकारी	Address/पता	Quantity/मात्रा	Delivery Days/डिलीवरी के दिन
1	UNNIMAYA K P	682302,HINDUSTAN ORGANIC CHEMICALS LTD, AMBALAMUGAL ERNAKULAM	3	30

MECHANICAL SEAL ASSEMBLY COMPLETE FOR P 3001 P3002 P 6501

(Minimum 50% and 20% Local Content required for qualifying as Class 1 and Class 2 Local Supplier respectively/क्रमशः श्रेणी 1 और श्रेणी 2 के स्थानीय आपूर्तिकर्ता के रूप में अर्हता प्राप्त करने के लिए आवश्यक)

Brand Type/ब्रांड का प्रकार	Unbranded

Technical Specifications/तकनीकी विशिष्टियाँ

Specification Document	View File
BOQ Detail Document	View File

Advisory-Please refer attached BOQ document for detailed consignee list and delivery period.

Consignees/Reporting Officer/परेषिती/रिपोर्टिंग अधिकारी and/ तथा Quantity/मात्रा

S.No./क्र. सं.	Consignee Reporting/Officer/ परेषिती/रिपोर्टिंग अधिकारी	Address/पता	Quantity/मात्रा	Delivery Days/डिलीवरी के दिन
1	UNNIMAYA K P	682302,HINDUSTAN ORGANIC CHEMICALS LTD, AMBALAMUGAL ERNAKULAM	4	30

SEAL RING TC FOR P 3001 P3002 P 6501

(Minimum 50% and 20% Local Content required for qualifying as Class 1 and Class 2 Local Supplier respectively/क्रमशः श्रेणी 1 और श्रेणी 2 के स्थानीय आपूर्तिकर्ता के रूप में अर्हता प्राप्त करने के लिए आवश्यक)

Brand Type/ब्रांड का प्रकार	Unbranded

Technical Specifications/तकनीकी विशिष्टियाँ

Specification Document	View File

BOQ Detail Document	View File

Advisory-Please refer attached BOQ document for detailed consignee list and delivery period.

Consignees/Reporting Officer/परेषिती/रिपोर्टिंग अधिकारी and/ तथा Quantity/मात्रा

S.No./क्र. सं.	Consignee Reporting/Officer/ परेषिती/रिपोर्टिंग अधिकारी	Address/पता	Quantity/मात्रा	Delivery Days/डिलीवरी के दिन
1	UNNIMAYA K P	682302,HINDUSTAN ORGANIC CHEMICALS LTD, AMBALAMUGAL ERNAKULAM	4	30

SEAL RING SILICON CARBIDE FOR P 3001 P3002 P 6501

(Minimum 50% and 20% Local Content required for qualifying as Class 1 and Class 2 Local Supplier respectively/क्रमशः श्रेणी 1 और श्रेणी 2 के स्थानीय आपूर्तिकर्ता के रूप में अर्हता प्राप्त करने के लिए आवश्यक)

Brand Type/ब्रांड का प्रकार	Unbranded

Technical Specifications/तकनीकी विशिष्टियाँ

Specification Document	View File
BOQ Detail Document	View File

Advisory-Please refer attached BOQ document for detailed consignee list and delivery period.

Consignees/Reporting Officer/परेषिती/रिपोर्टिंग अधिकारी and/ तथा Quantity/मात्रा

S.No./क्र. सं.	Consignee Reporting/Officer/ परेषिती/रिपोर्टिंग अधिकारी	Address/पता	Quantity/मात्रा	Delivery Days/डिलीवरी के दिन

S.No./क्र. सं.	Consignee Reporting/Officer/ परेषिती/रिपोर्टिंग अधिकारी	Address/पता	Quantity/मात्रा	Delivery Days/डिलीवरी के दिन
1	UNNIMAYA K P	682302,HINDUSTAN ORGANIC CHEMICALS LTD, AMBALAMUGAL ERNAKULAM	4	30

SHAFT PACKING DURAFLON FOR 3001 P3002 P 6501

(Minimum 50% and 20% Local Content required for qualifying as Class 1 and Class 2 Local Supplier respectively/क्रमशः श्रेणी 1 और श्रेणी 2 के स्थानीय आपूर्तिकर्ता के रूप में अर्हता प्राप्त करने के लिए आवश्यक)

Brand Type/ब्रांड का प्रकार	Unbranded

Technical Specifications/तकनीकी विशिष्टियाँ

Specification Document	View File
BOQ Detail Document	View File

Advisory-Please refer attached BOQ document for detailed consignee list and delivery period.

Consignees/Reporting Officer/परेषिती/रिपोर्टिंग अधिकारी and/ तथा Quantity/मात्रा

S.No./क्र. सं.	Consignee Reporting/Officer/ परेषिती/रिपोर्टिंग अधिकारी	Address/पता	Quantity/मात्रा	Delivery Days/डिलीवरी के दिन
1	UNNIMAYA K P	682302,HINDUSTAN ORGANIC CHEMICALS LTD, AMBALAMUGAL ERNAKULAM	10	30

SHAFT PACKING DURAFLON FOR P3004 P 3005 P 3501

(Minimum 50% and 20% Local Content required for qualifying as Class 1 and Class 2 Local Supplier respectively/क्रमशः श्रेणी 1 और श्रेणी 2 के स्थानीय आपूर्तिकर्ता के रूप में अर्हता प्राप्त करने के लिए आवश्यक)

Brand Type/ब्रांड का प्रकार	Unbranded

Technical Specifications/तकनीकी विशिष्टियाँ

Specification Document	View File

BOQ Detail Document	View File

Advisory-Please refer attached BOQ document for detailed consignee list and delivery period.

Consignees/Reporting Officer/परेषिती/रिपोर्टिंग अधिकारी and/ तथा Quantity/मात्रा

S.No./क्र. सं.	Consignee Reporting/Officer/ परेषिती/रिपोर्टिंग अधिकारी	Address/पता	Quantity/मात्रा	Delivery Days/डिलीवरी के दिन
1	UNNIMAYA K P	682302,HINDUSTAN ORGANIC CHEMICALS LTD, AMBALAMUGAL ERNAKULAM	16	30

SHAFT SLEEVE SS316 FOR P3004 P 3005 P 3501

(Minimum 50% and 20% Local Content required for qualifying as Class 1 and Class 2 Local Supplier respectively/क्रमशः श्रेणी 1 और श्रेणी 2 के स्थानीय आपूर्तिकर्ता के रूप में अर्हता प्राप्त करने के लिए आवश्यक)

Brand Type/ब्रांड का प्रकार	Unbranded

Technical Specifications/तकनीकी विशिष्टियाँ

Specification Document	View File
BOQ Detail Document	View File

Advisory-Please refer attached BOQ document for detailed consignee list and delivery period.

Consignees/Reporting Officer/परेषिती/रिपोर्टिंग अधिकारी and/ तथा Quantity/मात्रा

S.No./क्र. सं.	Consignee Reporting/Officer/ परेषिती/रिपोर्टिंग अधिकारी	Address/पता	Quantity/मात्रा	Delivery Days/डिलीवरी के दिन

S.No./क्र. सं.	Consignee Reporting/Officer/ परेषिती/रिपोर्टिंग अधिकारी	Address/पता	Quantity/मात्रा	Delivery Days/डिलीवरी के दिन
1	UNNIMAYA K P	682302,HINDUSTAN ORGANIC CHEMICALS LTD, AMBALAMUGAL ERNAKULAM	4	30

SEAL RING TC FOR P3004 P 3005 P 3501

(Minimum 50% and 20% Local Content required for qualifying as Class 1 and Class 2 Local Supplier respectively/क्रमशः श्रेणी 1 और श्रेणी 2 के स्थानीय आपूर्तिकर्ता के रूप में अर्हता प्राप्त करने के लिए आवश्यक)

Brand Type/ब्रांड का प्रकार	Unbranded

Technical Specifications/तकनीकी विशिष्टियाँ

Specification Document	View File
BOQ Detail Document	View File

Advisory-Please refer attached BOQ document for detailed consignee list and delivery period.

Consignees/Reporting Officer/परेषिती/रिपोर्टिंग अधिकारी and/ तथा Quantity/मात्रा

S.No./क्र. सं.	Consignee Reporting/Officer/ परेषिती/रिपोर्टिंग अधिकारी	Address/पता	Quantity/मात्रा	Delivery Days/डिलीवरी के दिन
1	UNNIMAYA K P	682302,HINDUSTAN ORGANIC CHEMICALS LTD, AMBALAMUGAL ERNAKULAM	10	30

SHAFT SLEEVE FOR P 3006

(Minimum 50% and 20% Local Content required for qualifying as Class 1 and Class 2 Local Supplier respectively/क्रमशः श्रेणी 1 और श्रेणी 2 के स्थानीय आपूर्तिकर्ता के रूप में अर्हता प्राप्त करने के लिए आवश्यक)

Brand Type/ब्रांड का प्रकार	Unbranded

Technical Specifications/तकनीकी विशिष्टियाँ

Specification Document	View File

BOQ Detail Document	View File

Advisory-Please refer attached BOQ document for detailed consignee list and delivery period.

Consignees/Reporting Officer/परेषिती/रिपोर्टिंग अधिकारी and/ तथा Quantity/मात्रा

S.No./क्र. सं.	Consignee Reporting/Officer/ परेषिती/रिपोर्टिंग अधिकारी	Address/पता	Quantity/मात्रा	Delivery Days/डिलीवरी के दिन
1	UNNIMAYA K P	682302,HINDUSTAN ORGANIC CHEMICALS LTD, AMBALAMUGAL ERNAKULAM	2	30

MECH. SEAL ASSEMBLY COMPLETE FOR P 3006

(Minimum 50% and 20% Local Content required for qualifying as Class 1 and Class 2 Local Supplier respectively/क्रमशः श्रेणी 1 और श्रेणी 2 के स्थानीय आपूर्तिकर्ता के रूप में अर्हता प्राप्त करने के लिए आवश्यक)

Brand Type/ब्रांड का प्रकार	Unbranded

Technical Specifications/तकनीकी विशिष्टियाँ

Specification Document	View File
BOQ Detail Document	View File

Advisory-Please refer attached BOQ document for detailed consignee list and delivery period.

Consignees/Reporting Officer/परेषिती/रिपोर्टिंग अधिकारी and/ तथा Quantity/मात्रा

S.No./क्र. सं.	Consignee Reporting/Officer/ परेषिती/रिपोर्टिंग अधिकारी	Address/पता	Quantity/मात्रा	Delivery Days/डिलीवरी के दिन

S.No./क्र. सं.	Consignee Reporting/Officer/ परेषिती/रिपोर्टिंग अधिकारी	Address/पता	Quantity/मात्रा	Delivery Days/डिलीवरी के दिन
1	UNNIMAYA K P	682302,HINDUSTAN ORGANIC CHEMICALS LTD, AMBALAMUGAL ERNAKULAM	2	30

SEAL RING TC FOR P 3006

(Minimum 50% and 20% Local Content required for qualifying as Class 1 and Class 2 Local Supplier respectively/क्रमशः श्रेणी 1 और श्रेणी 2 के स्थानीय आपूर्तिकर्ता के रूप में अर्हता प्राप्त करने के लिए आवश्यक)

Brand Type/ब्रांड का प्रकार	Unbranded

Technical Specifications/तकनीकी विशिष्टियाँ

Specification Document	View File
BOQ Detail Document	View File

Advisory-Please refer attached BOQ document for detailed consignee list and delivery period.

Consignees/Reporting Officer/परेषिती/रिपोर्टिंग अधिकारी and/ तथा Quantity/मात्रा

S.No./क्र. सं.	Consignee Reporting/Officer/ परेषिती/रिपोर्टिंग अधिकारी	Address/पता	Quantity/मात्रा	Delivery Days/डिलीवरी के दिन
1	UNNIMAYA K P	682302,HINDUSTAN ORGANIC CHEMICALS LTD, AMBALAMUGAL ERNAKULAM	4	30

SEAL RING TC FOR P 6001

(Minimum 50% and 20% Local Content required for qualifying as Class 1 and Class 2 Local Supplier respectively/क्रमशः श्रेणी 1 और श्रेणी 2 के स्थानीय आपूर्तिकर्ता के रूप में अर्हता प्राप्त करने के लिए आवश्यक)

Brand Type/ब्रांड का प्रकार	Unbranded

Technical Specifications/तकनीकी विशिष्टियाँ

Specification Document	View File

BOQ Detail Document	View File

Advisory-Please refer attached BOQ document for detailed consignee list and delivery period.

Consignees/Reporting Officer/परेषिती/रिपोर्टिंग अधिकारी and/ तथा Quantity/मात्रा

S.No./क्र. सं.	Consignee Reporting/Officer/ परेषिती/रिपोर्टिंग अधिकारी	Address/पता	Quantity/मात्रा	Delivery Days/डिलीवरी के दिन
1	UNNIMAYA K P	682302,HINDUSTAN ORGANIC CHEMICALS LTD, AMBALAMUGAL ERNAKULAM	4	30

SHAFT SLEEVE FOR 33 P 001 A

(Minimum 50% and 20% Local Content required for qualifying as Class 1 and Class 2 Local Supplier respectively/क्रमशः श्रेणी 1 और श्रेणी 2 के स्थानीय आपूर्तिकर्ता के रूप में अर्हता प्राप्त करने के लिए आवश्यक)

Brand Type/ब्रांड का प्रकार	Unbranded

Technical Specifications/तकनीकी विशिष्टियाँ

Specification Document	View File
BOQ Detail Document	View File

Advisory-Please refer attached BOQ document for detailed consignee list and delivery period.

Consignees/Reporting Officer/परेषिती/रिपोर्टिंग अधिकारी and/ तथा Quantity/मात्रा

S.No./क्र. सं.	Consignee Reporting/Officer/ परेषिती/रिपोर्टिंग अधिकारी	Address/पता	Quantity/मात्रा	Delivery Days/डिलीवरी के दिन

S.No./क्र. सं.	Consignee Reporting/Officer/ परेषिती/रिपोर्टिंग अधिकारी	Address/पता	Quantity/मात्रा	Delivery Days/डिलीवरी के दिन
1	UNNIMAYA K P	682302,HINDUSTAN ORGANIC CHEMICALS LTD, AMBALAMUGAL ERNAKULAM	2	30

CARBON INSERT NO 5 FOR 101 P 002

(Minimum 50% and 20% Local Content required for qualifying as Class 1 and Class 2 Local Supplier respectively/क्रमशः श्रेणी 1 और श्रेणी 2 के स्थानीय आपूर्तिकर्ता के रूप में अर्हता प्राप्त करने के लिए आवश्यक)

Brand Type/ब्रांड का प्रकार	Unbranded

Technical Specifications/तकनीकी विशिष्टियाँ

Specification Document	View File
BOQ Detail Document	View File

Advisory-Please refer attached BOQ document for detailed consignee list and delivery period.

Consignees/Reporting Officer/परेषिती/रिपोर्टिंग अधिकारी and/ तथा Quantity/मात्रा

S.No./क्र. सं.	Consignee Reporting/Officer/ परेषिती/रिपोर्टिंग अधिकारी	Address/पता	Quantity/मात्रा	Delivery Days/डिलीवरी के दिन
1	UNNIMAYA K P	682302,HINDUSTAN ORGANIC CHEMICALS LTD, AMBALAMUGAL ERNAKULAM	4	30

SEAL RING TC FOR 101 P 002

(Minimum 50% and 20% Local Content required for qualifying as Class 1 and Class 2 Local Supplier respectively/क्रमशः श्रेणी 1 और श्रेणी 2 के स्थानीय आपूर्तिकर्ता के रूप में अर्हता प्राप्त करने के लिए आवश्यक)

Brand Type/ब्रांड का प्रकार	Unbranded

Technical Specifications/तकनीकी विशिष्टियाँ

Specification Document	View File

BOQ Detail Document	View File

Advisory-Please refer attached BOQ document for detailed consignee list and delivery period.

Consignees/Reporting Officer/परेषिती/रिपोर्टिंग अधिकारी and/ तथा Quantity/मात्रा

S.No./क्र. सं.	Consignee Reporting/Officer/ परेषिती/रिपोर्टिंग अधिकारी	Address/पता	Quantity/मात्रा	Delivery Days/डिलीवरी के दिन
1	UNNIMAYA K P	682302,HINDUSTAN ORGANIC CHEMICALS LTD, AMBALAMUGAL ERNAKULAM	4	30

SHAFT PACKING VITON FOR 101 P 002

(Minimum 50% and 20% Local Content required for qualifying as Class 1 and Class 2 Local Supplier respectively/क्रमशः श्रेणी 1 और श्रेणी 2 के स्थानीय आपूर्तिकर्ता के रूप में अर्हता प्राप्त करने के लिए आवश्यक)

Brand Type/ब्रांड का प्रकार	Unbranded

Technical Specifications/तकनीकी विशिष्टियाँ

Specification Document	View File
BOQ Detail Document	View File

Advisory-Please refer attached BOQ document for detailed consignee list and delivery period.

Consignees/Reporting Officer/परेषिती/रिपोर्टिंग अधिकारी and/ तथा Quantity/मात्रा

S.No./क्र. सं.	Consignee Reporting/Officer/ परेषिती/रिपोर्टिंग अधिकारी	Address/पता	Quantity/मात्रा	Delivery Days/डिलीवरी के दिन

S.No./क्र. सं.	Consignee Reporting/Officer/ परेषिती/रिपोर्टिंग अधिकारी	Address/पता	Quantity/मात्रा	Delivery Days/डिलीवरी के दिन
1	UNNIMAYA K P	682302,HINDUSTAN ORGANIC CHEMICALS LTD, AMBALAMUGAL ERNAKULAM	10	30

MECH. SEAL ASSEMBLY COMPLETE FOR 101 P 002

(Minimum 50% and 20% Local Content required for qualifying as Class 1 and Class 2 Local Supplier respectively/क्रमशः श्रेणी 1 और श्रेणी 2 के स्थानीय आपूर्तिकर्ता के रूप में अर्हता प्राप्त करने के लिए आवश्यक)

Brand Type/ब्रांड का प्रकार	Unbranded

Technical Specifications/तकनीकी विशिष्टियाँ

Specification Document	View File
BOQ Detail Document	View File

Advisory-Please refer attached BOQ document for detailed consignee list and delivery period.

Consignees/Reporting Officer/परेषिती/रिपोर्टिंग अधिकारी and/ तथा Quantity/मात्रा

S.No./क्र. सं.	Consignee Reporting/Officer/ परेषिती/रिपोर्टिंग अधिकारी	Address/पता	Quantity/मात्रा	Delivery Days/डिलीवरी के दिन
1	UNNIMAYA K P	682302,HINDUSTAN ORGANIC CHEMICALS LTD, AMBALAMUGAL ERNAKULAM	2	30

MECHANICAL SEAL RING TC FOR 102 P 001

(Minimum 50% and 20% Local Content required for qualifying as Class 1 and Class 2 Local Supplier respectively/क्रमशः श्रेणी 1 और श्रेणी 2 के स्थानीय आपूर्तिकर्ता के रूप में अर्हता प्राप्त करने के लिए आवश्यक)

Brand Type/ब्रांड का प्रकार	Unbranded

Technical Specifications/तकनीकी विशिष्टियाँ

Specification Document	View File

BOQ Detail Document	View File

Advisory-Please refer attached BOQ document for detailed consignee list and delivery period.

Consignees/Reporting Officer/परेषिती/रिपोर्टिंग अधिकारी and/ तथा Quantity/मात्रा

S.No./क्र. सं.	Consignee Reporting/Officer/ परेषिती/रिपोर्टिंग अधिकारी	Address/पता	Quantity/मात्रा	Delivery Days/डिलीवरी के दिन
1	UNNIMAYA K P	682302,HINDUSTAN ORGANIC CHEMICALS LTD, AMBALAMUGAL ERNAKULAM	4	30

CARBON INSERT NO 5 FOR 102 P 001

(Minimum 50% and 20% Local Content required for qualifying as Class 1 and Class 2 Local Supplier respectively/क्रमशः श्रेणी 1 और श्रेणी 2 के स्थानीय आपूर्तिकर्ता के रूप में अर्हता प्राप्त करने के लिए आवश्यक)

Brand Type/ब्रांड का प्रकार	Unbranded

Technical Specifications/तकनीकी विशिष्टियाँ

Specification Document	View File
BOQ Detail Document	View File

Advisory-Please refer attached BOQ document for detailed consignee list and delivery period.

Consignees/Reporting Officer/परेषिती/रिपोर्टिंग अधिकारी and/ तथा Quantity/मात्रा

S.No./क्र. सं.	Consignee Reporting/Officer/ परेषिती/रिपोर्टिंग अधिकारी	Address/पता	Quantity/मात्रा	Delivery Days/डिलीवरी के दिन

S.No./क्र. सं.	Consignee Reporting/Officer/ परेषिती/रिपोर्टिंग अधिकारी	Address/पता	Quantity/मात्रा	Delivery Days/डिलीवरी के दिन
1	UNNIMAYA K P	682302,HINDUSTAN ORGANIC CHEMICALS LTD, AMBALAMUGAL ERNAKULAM	6	30

CARBON INSERT NO 5 FOR P 2501

(Minimum 50% and 20% Local Content required for qualifying as Class 1 and Class 2 Local Supplier respectively/क्रमशः श्रेणी 1 और श्रेणी 2 के स्थानीय आपूर्तिकर्ता के रूप में अर्हता प्राप्त करने के लिए आवश्यक)

Brand Type/ब्रांड का प्रकार	Unbranded

Technical Specifications/तकनीकी विशिष्टियाँ

Specification Document	View File
BOQ Detail Document	View File

Advisory-Please refer attached BOQ document for detailed consignee list and delivery period.

Consignees/Reporting Officer/परेषिती/रिपोर्टिंग अधिकारी and/ तथा Quantity/मात्रा

S.No./क्र. सं.	Consignee Reporting/Officer/ परेषिती/रिपोर्टिंग अधिकारी	Address/पता	Quantity/मात्रा	Delivery Days/डिलीवरी के दिन
1	UNNIMAYA K P	682302,HINDUSTAN ORGANIC CHEMICALS LTD, AMBALAMUGAL ERNAKULAM	4	30

ROTARY ASSEMBLY COMPLETE FOR P 3007 P 3505

(Minimum 50% and 20% Local Content required for qualifying as Class 1 and Class 2 Local Supplier respectively/क्रमशः श्रेणी 1 और श्रेणी 2 के स्थानीय आपूर्तिकर्ता के रूप में अर्हता प्राप्त करने के लिए आवश्यक)

Brand Type/ब्रांड का प्रकार	Unbranded

Technical Specifications/तकनीकी विशिष्टियाँ

Specification Document	View File

BOQ Detail Document	View File

Advisory-Please refer attached BOQ document for detailed consignee list and delivery period.

Consignees/Reporting Officer/परेषिती/रिपोर्टिंग अधिकारी and/ तथा Quantity/मात्रा

S.No./क्र. सं.	Consignee Reporting/Officer/ परेषिती/रिपोर्टिंग अधिकारी	Address/पता	Quantity/मात्रा	Delivery Days/डिलीवरी के दिन
1	UNNIMAYA K P	682302,HINDUSTAN ORGANIC CHEMICALS LTD, AMBALAMUGAL ERNAKULAM	4	30

Buyer Added Bid Specific Terms and Conditions/क्रेता द्वारा जोड़ी गई बिड की विशेष शर्तें

1. **Generic**

   OPTION CLAUSE: The Purchaser reserves the right to increase or decrease the quantity to be ordered up to 25 percent of bid quantity at the time of placement of contract. The purchaser also reserves the right to increase the ordered quantity by up to 25% of the contracted quantity during the currency of the contract at the contracted rates. Bidders are bound to accept the orders accordingly.

2. **Generic**

   Bidder financial standing: The bidder should not be under liquidation, court receivership or similar proceedings, should not be bankrupt. Bidder to upload undertaking to this effect with bid.

3. **Generic**

   Bidders are advised to check applicable GST on their own before quoting. Buyer will not take any responsibility in this regards. GST reimbursement will be as per actuals or as per applicable rates (whichever is lower), subject to the maximum of quoted GST %.

4. **Generic**

   Bidder shall submit the following documents along with their bid for Vendor Code Creation:

   a. Copy of PAN Card.

   b. Copy of GSTIN.

   c. Copy of Cancelled Cheque.

   d. Copy of EFT Mandate duly certified by Bank.

5. **Generic**

Data Sheet of the product(s) offered in the bid, are to be uploaded along with the bid documents. Buyers can match and verify the Data Sheet with the product specifications offered. In case of any unexplained mismatch of technical parameters, the bid is liable for rejection.

6. **Generic**

   Experience Criteria: The Bidder or its OEM {themselves or through reseller(s)} should have regularly, manufactured and supplied same or similar Category Products to any Central / State Govt Organization / PSU / Public Listed Company for 3 years before the bid opening date. Copies of relevant contracts to be submitted along with bid in support of having supplied some quantity during each of the year. In case of bunch bids, the primary product having highest value should meet this criterion.

7. **Generic**

   Manufacturer Authorization: Wherever Authorised Distributors/service providers are submitting the bid, Authorisation Form /Certificate with OEM/Original Service Provider details such as name, designation, address, e-mail Id and Phone No. required to be furnished along with the bid

8. **Generic**

   Supplier shall ensure that the Invoice is raised in the name of Consignee with GSTIN of Consignee only.

9. **Generic**

   While generating invoice in GeM portal, the seller must upload scanned copy of GST invoice and the screenshot of GST portal confirming payment of GST.

10. **Generic**

    Without prejudice to Buyer’s right to price adjustment by way of discount or any other right or remedy available to Buyer, Buyer may terminate the Contract or any part thereof by a written notice to the Seller, if:
    i) The Seller fails to comply with any material term of the Contract.
    ii) The Seller informs Buyer of its inability to deliver the Material(s) or any part thereof within the stipulated Delivery Period or such inability otherwise becomes apparent.
    iii) The Seller fails to deliver the Material(s) or any part thereof within the stipulated Delivery Period and/or to replace/rectify any rejected or defective Material(s) promptly.
    iv) The Seller becomes bankrupt or goes into liquidation.
    v) The Seller makes a general assignment for the benefit of creditors.
    vi) A receiver is appointed for any substantial property owned by the Seller.
    vii) The Seller has misrepresented to Buyer, acting on which misrepresentation Buyer has placed the Purchase Order on the Seller.

11. **Generic**

    1. The Seller shall not assign the Contract in whole or part without obtaining the prior written consent of buyer.
    2. The Seller shall not sub-contract the Contract in whole or part to any entity without obtaining the prior written consent of buyer.
    3. The Seller shall, notwithstanding the consent and assignment/sub-contract, remain jointly and severally liable and responsible to buyer together with the assignee/ sub-contractor, for and in respect of the due performance of the Contract and the Sellers obligations there under.

12. **Scope of Supply**

    Scope of supply (Bid price to include all cost components) : Only supply of Goods

13. **Turnover**

    Bidder Turn Over Criteria: The minimum average annual financial turnover of the bidder during the last three years, ending on 31st March of the previous financial year, should be as indicated in the bid document. Documentary evidence in the form of certified Audited Balance Sheets of relevant periods or a certificate from the Chartered Accountant / Cost Accountant indicating the turnover details for the

relevant period shall be uploaded with the bid. In case the date of constitution / incorporation of the bidder is less than 3 year old, the average turnover in respect of the completed financial years after the date of constitution shall be taken into account for this criteria.

14. **Purchase Preference (Centre)**

    Purchase preference to Micro and Small Enterprises (MSEs): Purchase preference will be given to MSEs as defined in Public Procurement Policy for Micro and Small Enterprises (MSEs) Order, 2012 dated 23.03.2012 issued by Ministry of Micro, Small and Medium Enterprises and its subsequent Orders/Notifications issued by concerned Ministry. If the bidder wants to avail the Purchase preference, the bidder must be the manufacturer of the offered product in case of bid for supply of goods. Traders are excluded from the purview of Public Procurement Policy for Micro and Small Enterprises. In respect of bid for Services, the bidder must be the Service provider of the offered Service. Relevant documentary evidence in this regard shall be uploaded along with the bid in respect of the offered product or service. If L-1 is not an MSE and MSE Seller (s) has/have quoted price within L-1+ 15% of margin of purchase preference /price band defined in relevant policy, such Seller shall be given opportunity to match L-1 price and contract will be awarded for percentage of 25% of total value.

15. **Certificates**

    Bidder's offer is liable to be rejected if they don't upload any of the certificates / documents sought in the Bid document, ATC and Corrigendum if any.

16. **Certificates**

    Material Test Certificate Should Be Sent Along with The Supply. The Material Will Be Checked by Buyer’s Lab & the Results of the Lab will be the Sole Criteria for Acceptance of the Item.

17. **Certificates**

    The bidder is required to upload, along with the bid, all relevant certificates such as BIS licence, type test certificate, approval certificates and other certificates as prescribed in the Product Specification given in the bid document.

18. **Buyer Added Bid Specific ATC**

    Buyer Added text based ATC clauses

    1. **DOCUMENTS SATISFYING ELIGIBILITY CRITERIA**
    2. **DULY SIGNED AND STAMPED TENDER TERMS AS PER ANNEXURE- II.IF ANY DEVIATION,PL.INDICATE SEPARATELY**
    3. **DULY FILLED AND SIGNED COMMERCIAL TERM FORMAT AS PER ANNEXURE III-A,B,C,D**
    4. **DULY FILLED AND SIGNED BID SECURITY DECLARATION & CLAUSE COMPLIANCE AS PER ANNEXURE -IV,V**
    5. **Guarantee Certificates+ + Mechanical Seal Complete Assembly drawings (For item no.3, 8,9,17,24) should be provided alongwith supply. These seals / spares are required for one to one replacement of the existing seals. Hence the party has to guarantee for the interchangeability, workmanship, material and performance**
    6.
    7. **DETAILED TECHNICAL SPECIFICATION OF OFFERED ITEMS SHOULD BE SUBMITTED ALONG WITH TECHNICAL BID**

    .

19. **Buyer Added Bid Specific ATC**

    Buyer uploaded ATC document Click here to view the file.

Disclaimer/अस्वीकरण

The additional terms and conditions have been incorporated by the Buyer after approval of the Competent Authority in Buyer Organization, whereby Buyer organization is solely responsible for the impact of these clauses on the bidding process, its outcome, and consequences thereof including any eccentricity / restriction arising in

the bidding process due to these ATCs and due to modification of technical specifications and / or terms and conditions governing the bid. Any clause(s) incorporated by the Buyer regarding following shall be treated as null and void and would not be considered as part of bid:-

1. Definition of Class I and Class II suppliers in the bid not in line with the extant Order / Office Memorandum issued by DPIIT in this regard.
2. Seeking EMD submission from bidder(s), including via Additional Terms & Conditions, in contravention to exemption provided to such sellers under GeM GTC.
3. Publishing Custom / BOQ bids for items for which regular GeM categories are available without any Category item bunched with it.
4. Creating BoQ bid for single item.
5. Mentioning specific Brand or Make or Model or Manufacturer or Dealer name.
6. Mandating submission of documents in physical form as a pre-requisite to qualify bidders.
7. Floating / creation of work contracts as Custom Bids in Services.
8. Seeking sample with bid or approval of samples during bid evaluation process.
9. Mandating foreign / international certifications even in case of existence of Indian Standards without specifying equivalent Indian Certification / standards.
10. Seeking experience from specific organization / department / institute only or from foreign / export experience.
11. Creating bid for items from irrelevant categories.
12. Incorporating any clause against the MSME policy and Preference to Make in India Policy.
13. Reference of conditions published on any external site or reference to external documents/clauses.
14. Asking for any Tender fee / Bid Participation fee / Auction fee in case of Bids / Forward Auction, as the case may be.

Further, if any seller has any objection/grievance against these additional clauses or otherwise on any aspect of this bid, they can raise their representation against the same by using the Representation window provided in the bid details field in Seller dashboard after logging in as a seller within 4 days of bid publication on GeM. Buyer is duty bound to reply to all such representations and would not be allowed to open bids if he fails to reply to such representations.

This Bid is also governed by the General Terms and Conditions/ यह बिड सामान्य शर्तों के अंतर्गत भी शासित है

In terms of GeM GTC clause 26 regarding Restrictions on procurement from a bidder of a country which shares a land border with India, any bidder from a country which shares a land border with India will be eligible to bid in this tender only if the bidder is registered with the Competent Authority. While participating in bid, Bidder has to undertake compliance of this and any false declaration and non-compliance of this would be a ground for immediate termination of the contract and further legal action in accordance with the laws./जेम की सामान्य शर्तों के खंड 26 के संदर्भ में भारत के साथ भूमि सीमा साझा करने वाले देश के बिडर से खरीद पर प्रतिबंध के संबंध में भारत के साथ भूमि सीमा साझा करने वाले देश का कोई भी बिडर इस निविदा में बिड देने के लिए तभी पात्र होगा जब वह बिड देने वाला सक्षम प्राधिकारी के पास पंजीकृत हो।बिड में भाग लेते समय बिडर को इसका अनुपालन करना होगा और कोई भी गलत घोषणा किए जाने व इसका अनुपालन न करने पर अनुबंध को तत्काल समाप्त करने और कानून के अनुसार आगे की कानूनी कार्रवाई का आधार होगा।

---Thank You/धन्यवाद---

HINDUSTAN ORGANIC CHEMICALS LIMITED
(A GOVERNMENT OF INDIA ENTERPRISE)
AMBALAMUGAL, ERNAKULAM DISTRICT, PIN – 682 302
PHONE: (0484) 2720911

SL.NO	ITEM DESCRIPTION	QTY	UNIT
1	MECHANICAL SEAL SPARES FOR P2005 SEAL TYPE : 2.750" INSIDE PT MATERIAL CODE : EU5EQTT DRAWING NO : 2H-25402 NDE SHAFT SLEEVE	2	NOS
2	MECHANICAL SEAL SPARES FOR P2005 SEAL TYPE : 2.750" INSIDE PT MATERIAL CODE : EU5EQTT DRAWING NO : 2H-25402 DE SHAFT SLEEVE	2	NOS
3	MECHANICAL SEAL SPARES FOR P2008 SEAL TYPE : 2.625" SIPT MATERIAL CODE : EA5E F/Q FT DRAWING NO : 2H-25404 MECHANICAL SEAL ASSEMBLY COMPLETE	4	NOS
4	MECHANICAL SEAL SPARES FOR P2008 SEAL TYPE : 2.625" SIPT MATERIAL CODE : EA5E F/Q FT DRAWING NO : 2H-25404 SEAL RING TC	4	NOS
5	MECHANICAL SEAL SPARES FOR P2008 SEAL TYPE : 2.625" SIPT MATERIAL CODE : EA5E F/Q FT DRAWING NO : 2H-25404 CARBON INSERT NO.5	8	NOS
6	MECHANICAL SEAL SPARES FOR P2501 SEAL TYPE : 1.750" ROTT-PRIMARY / RO -TANDOM MATERIAL CODE : E M/M 5/5 - - T/V T/V DRAWING NO: 2H-25529 SEAL RING TC	6	NOS
7	MECHANICAL SEAL SPARES FOR P2501 SEAL TYPE : 1.750" ROTT-PRIMARY / RO -TANDOM	8	NOS

	MATERIAL CODE : E M/M 5/5 - - T/V T/V DRAWING NO: 2H-25529 CARBON INSERT NO. 5		
8	MECHANICAL SEAL SPARES FOR P2501 SEAL TYPE : 1.750" ROTT-PRIMARY / RO -TANDOM MATERIAL CODE : E M/M 5/5 - - T/V T/V DRAWING NO: 2H-25529 MECH. SEAL ASSEMBLY COMPLETE	3	NOS
9	MECHANICAL SEAL SPARES FOR P3001/P3002/P6501 SEAL TYPE : 1.375" SINGLE INSIDE ROTT MATERIAL CODE : EM5E F/V TT DRAWING NO : 2H-33231 MECHANICAL SEAL ASSEMBLY COMPLETE	4	NOS
10	MECHANICAL SEAL SPARES FOR P3002/P6501 SEAL TYPE : 1.375" SINGLE INSIDE ROTT MATERIAL CODE : EM5E F/V TT DRAWING NO : 2H-33231 SEAL RING TC	4	NOS
11	MECHANICAL SEAL SPARES FOR P3001/P3002/P6501 SEAL TYPE : 1.375" SINGLE INSIDE ROTT MATERIAL CODE : EM5E F/V TT DRAWING NO : 2H-33231 SEAL RING – SiC (SILICON CARBIDE)	4	NOS
12	MECHANICAL SEAL SPARES FOR P3001/P3002/P6501 SEAL TYPE : 1.375" SINGLE INSIDE ROTT MATERIAL CODE : EM5E F/V TT DRAWING NO : 2H-33231 SHAFT PACKING DURAFLON	10	NOS
13	MECHANICAL SEAL SPARES FOR P3004 P3005 P3501 P4502 P4504 SEAL TYPE : 1.625" SINGLE INSIDE -ROTT MATERIAL CODE: EM5--TT DRAWING NO: 1H-25038 SHAFT PACKING DURAFLON, PT.NO:P	16	NOS
14	MECHANICAL SEAL SPARES FOR P3004 P3005 P3501 P4502 P4504 SEAL TYPE : 1.625" SINGLE INSIDE -ROTT MATERIAL CODE: EM5--TT DRAWING NO: 1H-25038 SHAFT SLEEVE SS316	4	NOS
15	MECHANICAL SEAL SPARES FOR P3004 P3005 P3501 P4502 P4504 SEAL TYPE : 1.625" SINGLE INSIDE -ROTT MATERIAL CODE: EM5--TT DRAWING NO: 1H-25038 SEAL RING TC, PT.NO: 3	10	NOS

16	MECHANICAL SEAL SAPRES FOR P 3006 SEAL TYPE : 2.125" INSIDE ROTT MATERIAL CODE : EM5--TT DRAWING NO : 2H-25040 SHAFT SLEEVE, PT.NO: 10	2	NOS
17	MECHANICAL SEAL SAPRES FOR P 3006 SEAL TYPE : 2.125" INSIDE ROTT MATERIAL CODE : EM5--TT DRAWING NO : 2H-25040 MECH. SEAL ASSEMBLY COMPLETE	2	NOS
18	MECHANICAL SEAL SPARES FOR P 3006 SEAL TYPE : 2.125" INSIDE ROTT MATERIAL CODE : EM5--TT DRAWING NO : 2H-25040 SEAL RING TC, PT.NO: 3	4	NOS
19	MECHANICAL SEAL SPARES FOR P6001 SEAL TYPE : 3.375" SINGLE INSIDE PT MATERIAL CODE : EU5E F/Q TT DRAWING NO:2H-25405 SEAL RING TC, PT.NO: 3	4	NOS
20	SPARE FOR MECHANICAL SEAL FOR 33P001A/B DRAWING NO: A 424979 R3 SEAL SPECIFICATION: 901U (SIZE:1.875") SHAFT SLEEVE, PT.NO: 510	2	NOS
21	SPARES FOR MECHANICAL SEAL FOR 101P002 SEAL SPECIFICATION: 2.375" BALANCED INSIDE PT MATERIAL CODE: EU5--TT DRAWING NO: 2H-33227 R1 CARBON INSERT NO: 5, PT.NO: 2	4	NOS
22	SPARES FOR MECHANICAL SEAL FOR 101P002 SEAL SPECIFICATION: 2.375" BALANCED INSIDE PT MATERIAL CODE: EU5--TT DRAWING NO: 2H-33227 R1 SEAL RING TC, PT.NO: 3	4	NOS
23	SPARES FOR MECHANICAL SEAL FOR 101P002 SEAL SPECIFICATION: 2.375" BALANCED INSIDE PT MATERIAL CODE: EU5--TT DRAWING NO: 2H-33227 R1 SHAFT PACKING VITON, PT.NO: 9	10	NOS
24	SPARES FOR MECHANICAL SEAL FOR 101P002 SEAL SPECIFICATION: 2.375" BALANCED INSIDE PT MATERIAL CODE: EU5--TT DRAWING NO: 2H-33227 R1	2	NOS

	MECH. SEAL ASSEMBLY COMPLETE		
25	SPARES FOR MECHANICAL SEAL FOR 102P001/102P003 SEAL SPEC : 2.375" PTO CATRIDGE MATERIAL CODE: EU5E F/V VV DRAWING NO: 2A-12526 R3 MECHANICAL SEAL RING TC, PT.NO: 3	4	NOS
26	SPARES FOR MECHANICAL SEAL FOR 102P001/102P003 SEAL SPEC : 2.375" PTO CATRIDGE MATERIAL CODE: EU5E F/V VV DRAWING NO: 2A-12526 R3 CARBON INSERT NO: 5, PT.NO: 2	6	NOS
27	MECHANICAL SEAL SPARES FOR P2504 SEAL TYPE : 1.375" SINGLE INSIDE PT WITH LP SEAL MATERIAL CODE : EM5--TT DRAWING NO:2H-33235 CARBON INSERT NO. 5, PT.NO: 2	4	NOS
28	MECHANICAL SEAL SPARES FOR P 3007 / P 3505 / P 4012 / P 4515 SEAL TYPE : 1.375" SINGLE INSIDE RO MATERIAL CODE : EM5--VV DRAWING NO:2H-33239 ROTARY ASSEMBLY COMPLETE	4	NOS

NOTE:

- **Guarantee Certificates+ + Mechanical Seal Complete Assembly drawings (For item no.3,8,9,17,24) should be provided alongwith supply. These seals / spares are required for one to one replacement of the existing seals. Hence the party has to guarantee for the interchangeability, workmanship, material and performance**

- **GROUPING OF REQUIREMENTS:**Please note that groupwise (Pumpwise) L-1 will be considered while evaluating the offer. Grouping will be done as below for Tender Reference No:MAT/PUR/33050/23 **(MECHANICAL SEAL SPARES -DURAMETALLIC)**

Group no	**Group name**	**Specification sheet -Item. No**
1	P 2005 A/B	Item no. 1,2
2	P 2008 A/B	Item no. 3,4,5
3	P 2501 A/B	Item no. 6,7, 8
4	P 3001 A/B, P 3002 A/B & P 6501 A/B	Item no. 9,10,11,12

5	P 3004 A/B, P 3005 A/B, P 3501 A/B, P 4502 A/B & P 4504 A/B	Item no. 13,14,15
6	P 3006 A/B	Item no. 16,17,18
7	P 6001 A/B	Item no. 19
8	33 P 001 A/B	Item no. 20
9	101 P 002 A/B	Item no. 21,22,23,24
10	102 P 001 A/B & 102 P 003 A/B	Item no. 25,26
11	P 2504 A/B	Item no. 27
12	P 3007 A/B, P 3505, P 4012 A/B & P 4514 A/B	Item no. 28

- **DETAILED TECHNICAL SPECIFICATION OF OFFERED ITEMS SHOULD BE SUBMITTED ALONG WITH TECHNICAL BID**
- **DRAWING OF THE MECHANICAL SEAL IS ATTACHED BELOW**

2005 DE

No	DATE	REVISION
R1	6.8.84	API PLAN 02 WAS 11 & 13
R2	24.8.84	FLOATING BUSH WAS #5 CARBON

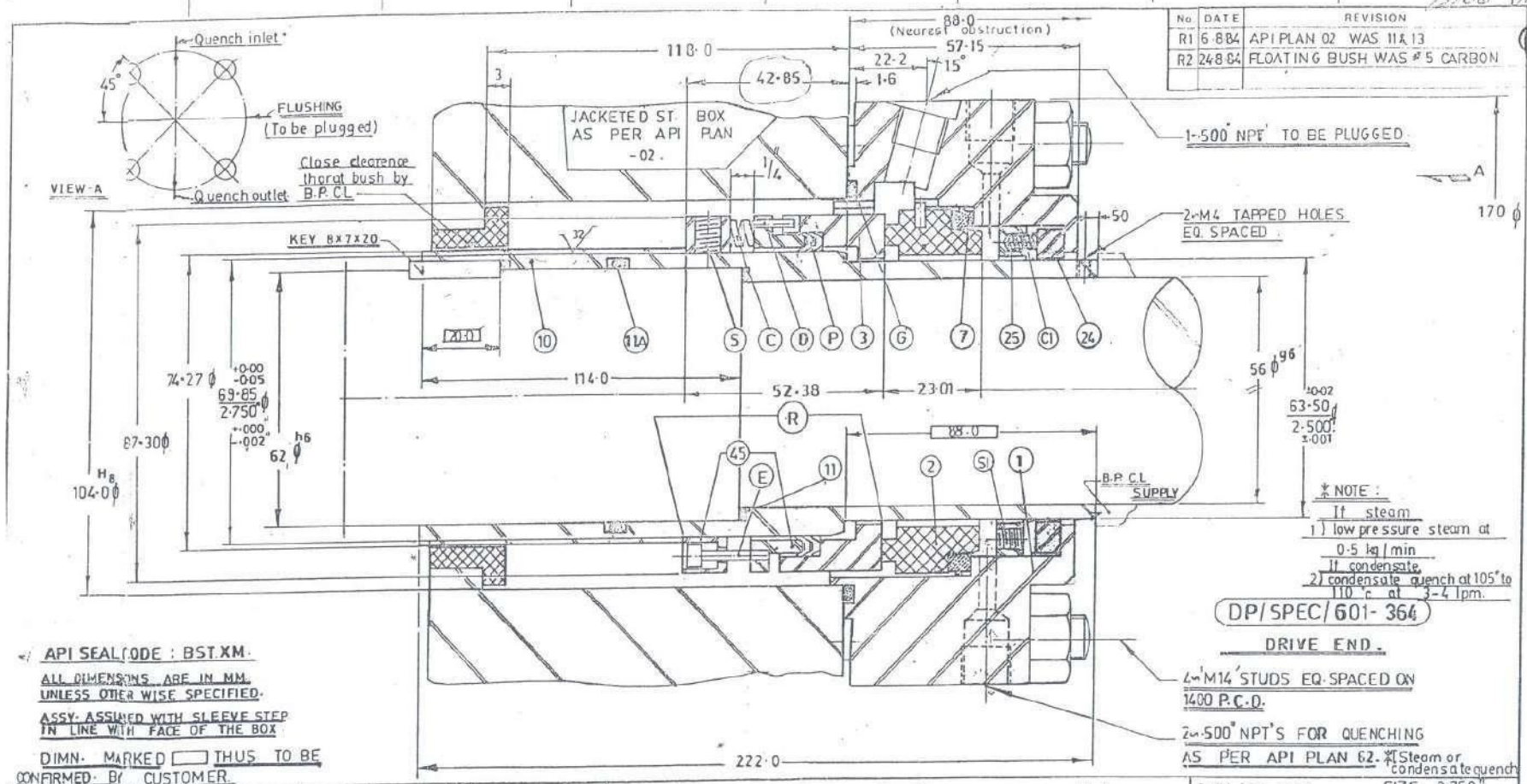

NOTE :
If steam
1) low pressure steam at 0.5 kg/min
If condensate,
2) condensate quench at 105° to 110 °c at 3-4 lpm.

DP/SPEC/601-364

DRIVE END.

4-M14 STUDS EQ. SPACED ON 1400 P.C.D.

2-.500" NPT'S FOR QUENCHING AS PER API PLAN 62. (Steam or condensate quench)

API SEAL CODE : BST.XM.

ALL DIMENSIONS ARE IN MM. UNLESS OTHER WISE SPECIFIED.

ASSY. ASSUMED WITH SLEEVE STEP IN LINE WITH FACE OF THE BOX

DIMN. MARKED [ ] THUS TO BE CONFIRMED BY CUSTOMER.

R	ROTARY UNIT CONSISTING OF:		1	GLAND RING AK 2478	316 ST. STEEL.
3	SEAL RING	TUNG. CAR. 62.6	2	INSERT	#5 CARBON.
45	COMP UNIT	316 ST. STEEL.	7	DURAFLEX RING	DURAFLON.
	SPRINGS	ALLOY. 20	25	EXP. COLLAR	316 ST STEEL.
	DRIVE PINS	ALLOY. 20	G	GASKET	VITON
	SPRING PINS	ALLOY. 20	P	SHAFT PKG	DURAFLON.
S1	SET SCREWS	ALLOY. 20	24	FLOATING BUSH	316 ST STEEL.
	SLEEVE	316 ST. STEEL.	11A	SLEEVE PKG	VITON
	SPRINGS	ALLOY. 20.	11	SLEEVE PKG	DURAFLON

RECOMMENDED SPARE PARTS: 2, 3, 7 11A, 11, C, G, P & S.

BUYER :- Bharat Pumps & Compressors Ltd.

ORDER No :- 461/1679024/382. DT: 10.7.84. ITEM : 1

USER :- FEDO/HOC (Phenol) COCHIN QTY:

PUMP TYPE & SIZE	PUMP ITEM No.	PUMP SERIAL No.	REFERENCE DRAWING No.	FLUID	PRESSURE SUCT. (Kg/cm²)	PRESSURE DISCH. (Kg/cm²)	R.P.M.	TEMP °C	SP GR
KSMK-V 2x6x14	2005 A/B	20872-01		HYDRO CARBON	18.6 to 21.8	38.0	2950	130°C	0.7
					BOX PRESSURE 30.0 to 38.0 Kg/cm²				MSCOSITY .17cp

DURA SEAL TYPE SIZE 2.750"

INSIDE PT

MATL CODE E U S E Q T T

ORDER PARTS BY B.M No.

F.O.No S 112995. SCALE

DATE: 28.5.84. DWG No 2H-25402 R2

DWN: RRS. CHKD:

FORM

ENVIRONMENT CONTROL		
.I PLAN	02	62
SH FLUID	JACKETED ST.BOX	
SH PRESS.		
SH TEMP.		
SH RATE		

API SEAL CODE : BSTGM

This document contains proprietary information which is property of Durametallic Sanmar Limited. This document may not , in whole or in part, be duplicated, disclosed to other than the present receipient or used for any other purpose without written permission of Durametallic Sanmar Limited. This document shall be returned on request.

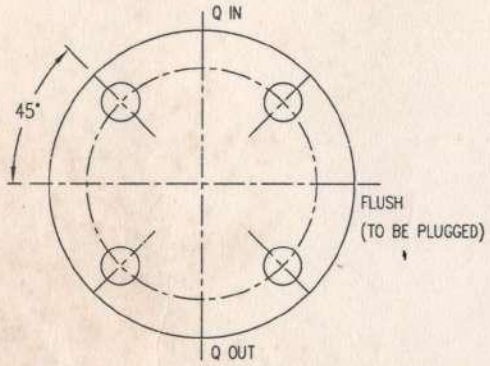

VIEW 'X'

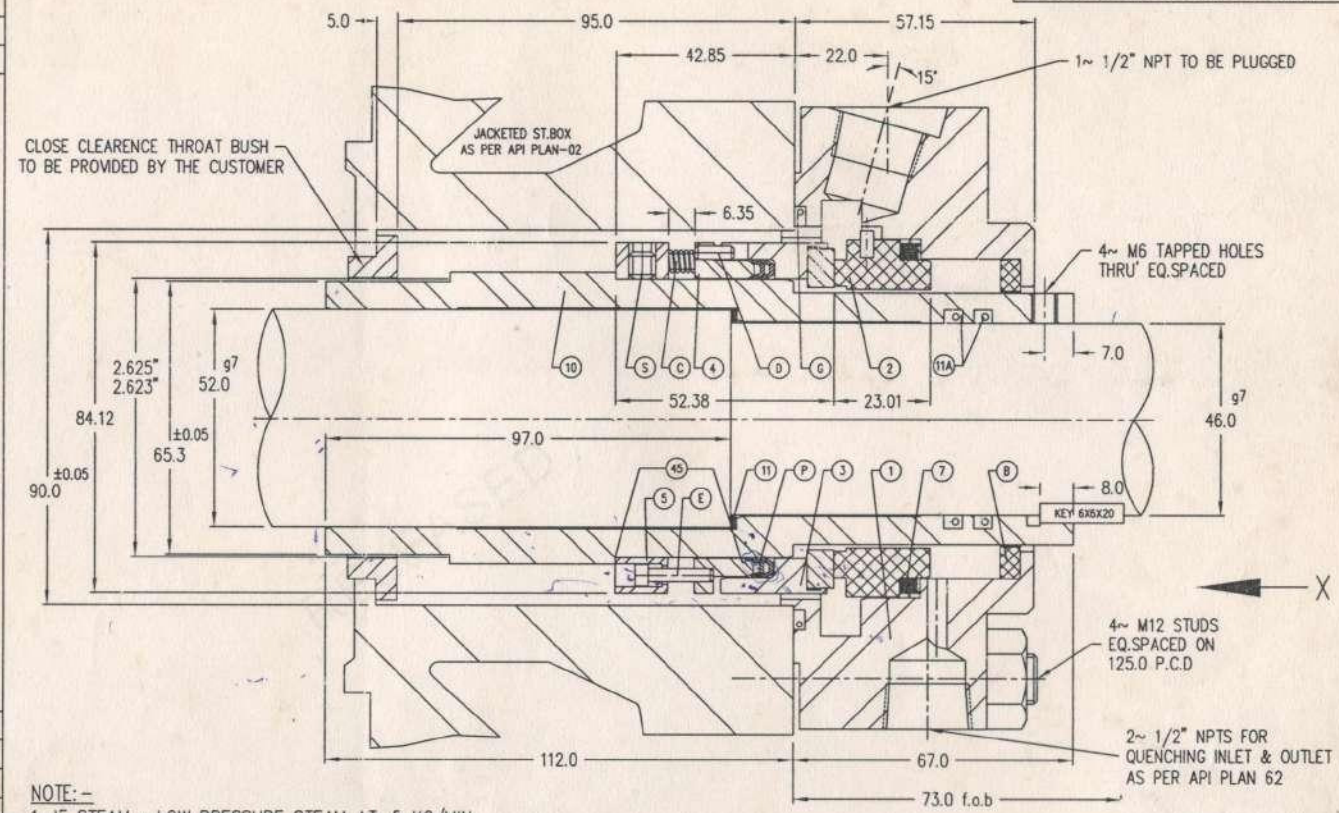

NOTE:-
1. IF STEAM : LOW PRESSURE STEAM AT .5 KG/MIN
2. IF CONDENSATE : CONDENSATE QUENCH AT 105°C TO 110°C AT 3~4 LPM

NOMENCLATURE	MATERIAL		PART CODE	QTY.
SLEEVE PACKING	VITON	(R4)	MVSR1750333	2
TH.BUSH	#5 CARBON	(R4)	1H-44380-R1	1
GLAND GASKET	VITON		MVSR5000333	1
SHAFT PKG	G.F.DURAFLON	(R5)	PF3M2625333	1
SET SCREW	20 SS		MKAX8840403	2
SPRING PIN	20 SS		MKAX8840217	7
DRIVE PIN	20 SS		MKAX8840212	3
SPRING	20 SS		MKAX8840301	14
COMP.RING	316 SS		XEXN2625333	1
SLEEVE PACKING	ANNELED SS		MN3G3047AH3	1
SLEEVE	316 SS		2H-26057	1
INSERT MTG.	DURAFLEX	(R4)	PT3T3000B33	1
COLLAR	316 SS		LE3C2625333	1
COMP. RING	316 SS		NE3N2625333	1
SEAL RING	TUN.CAR-A		KA3T2625333	1
INSERT	#5 CARBON		Y5FQ2625M33	1
GLAND RING	316 SS		2H-22340	1

ECOMMENDED SPARE PARTS 2,3,C,S,P,7,11A,G.

ALL DIMENSIONS IN MM ~~INCHES~~
UNLESS OTHERWISE SPECIFIED

DVCL No.:- ESI NO:-
PIR NO.:- 277/9 SSI NO:-

NO.	DATE	REVISION
5	14/03/06	REFER ECN : 5547
4	4/9/99	REFER ECN : 2599
3	25/7/89	SECONDARY PACKINGS WERE IN VITON
2	24/8/84	FLOATING BUSH WAS #5 CARBON
1	6/8/84	REVISED AS PER APPROVED DRG.

EQUIPMENT ITEM NO.: 2008 A/B

EQUIPMENT TYPE & SIZE: KSMK 2X3X11H

SERIAL NO.: 20872-02

R.C.DWG.NO.: 4C 1468 / DP/SPE 201-268

BUYER: HOCL- AMBALAMUGAL

USER : FEDO/HOC (PHENOL) COCHIN

PRODUCT: HYDRO CARBON

DURASEAL TYPE: SINGLE INSIDE - PT" SIZE: 2.625"

SUCT.PRESS.	9.7 Kg/cm2	TEMP.	126° C
DISCH.PRESS.	21.2 Kg/cm2	SP.GR.	.734
BOX PRESS.	20.0 Kg/cm2	VISC.	.187 CP
VAP.PRESS.		R.P.M.	2950

MAT'L CODE: E A 5 E F/Q F T

ORDER PARTS BY B/M NO: D25404
F.O.NO: S 11299/5 SCALE: NTS
DATE: 26-5-84 DWG.NO.: 2H-25404 REV. 5
DRN: RRS CHKD:
APPD:

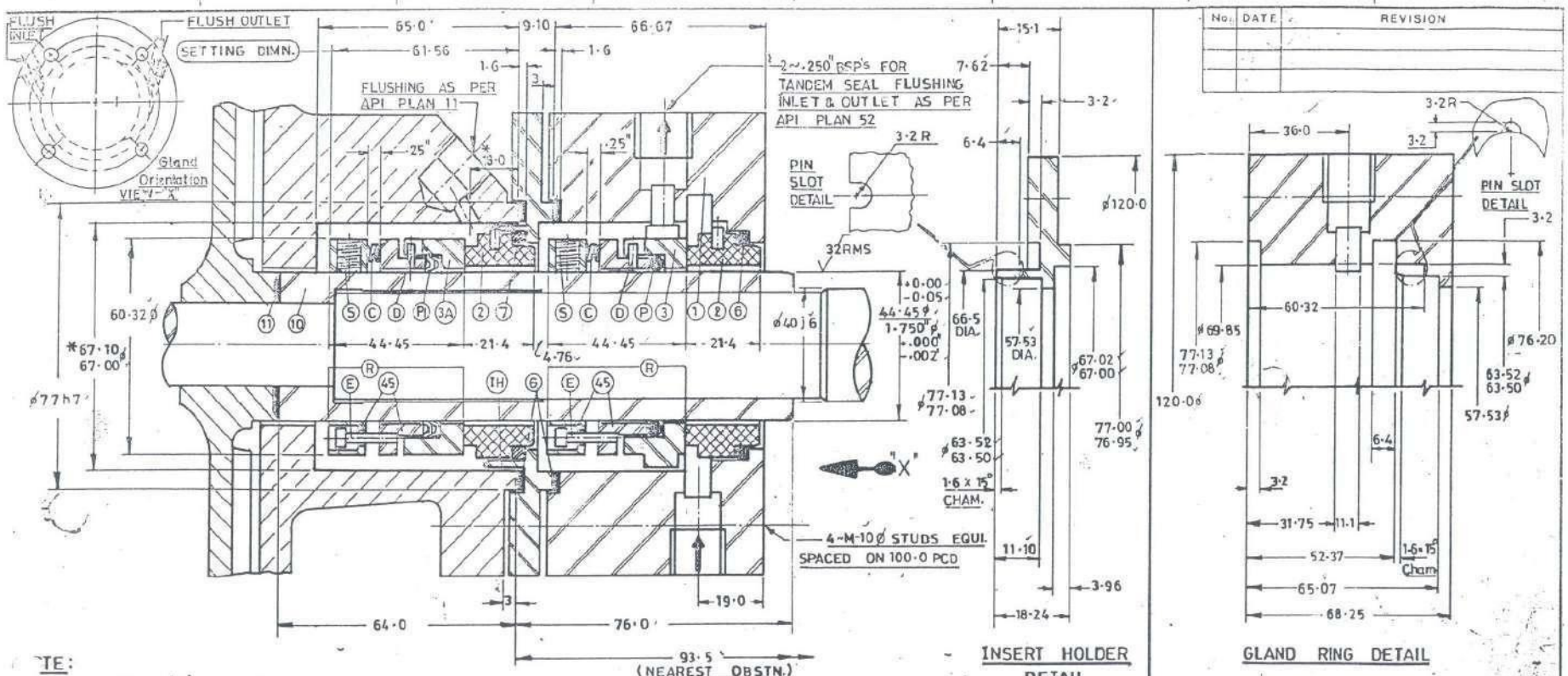

No.	DATE	REVISION

NOTE:

1. DIMNS. MARKED '*' THUS TO BE MAINTAINED BY CUSTOMER.
2. ALL DIMNS. IN MM UNLESS OTHERWISE SPECIFIED.

R	ROTARY UNITS	CONSISTING OF	1	GLAND RING	CUSTOMER
3A	SEAL RINGS	TUNG. CAR. M	2	INSERTS	5 CARBON
45	COMP. UNITS	316 SS	6	O' RINGS	VITON
C	SPRINGS	20 SS	P	SHAFT PKGS.	VITON
D	DRIVE PINS	20 SS	G	GASKETS	CUSTOMER
E	SPRING PINS	20 SS	10	SLEEVE	"
S	SET SCREWS	20 SS	11	SLEEVE PKG.	"
P_1	SHAFT PKG.	DURAFLON	IH	INSERT HOLDER	"
7	INSERT MTG.	"			

RECOMMENDED SPARE PARTS: 2, 3, 3A, 6, C, P, S, P_1, 7.

BUYER: HOC, PHENOL

ORDER No: P/486/87 DT. 17-12-87 ITEM No. 28

USER

PUMP TYPE & SIZE	PUMP ITEM No.	PUMP SERIAL No.	REFERENCE DRAWING No.	FLUID	PRESSURE Kg/cm² SUCT.	PRESSURE Kg/cm² DISCH.	R.P.M.	TEMP C°	SPGR
KHIMLINE 08 ASSY.	P2501 AB		A3-853	CUMENE	0 To 0.7 MAX.	9.84		39°	0.846

DUAL SEAL TYPE: ROTT PRIMARY / RO-TANDEM

SIZE: 1.750"

MAT. E M/M 5/5 - - T/V T/V

ORDER PARTS BY B/M No.

F.O. No.: A19303/8

DATE: 28-1-88

DWN: S.V. CHKD:

FORM: 2HF-234420

SCALE:

DWG. No. 2H-25529

50964
10508
A 213469
F.O. NO

ENVIRONMENT CONTROL		LEGEND
API PLAN	11	
FLUSH FLUID	PUMPED FLUID	

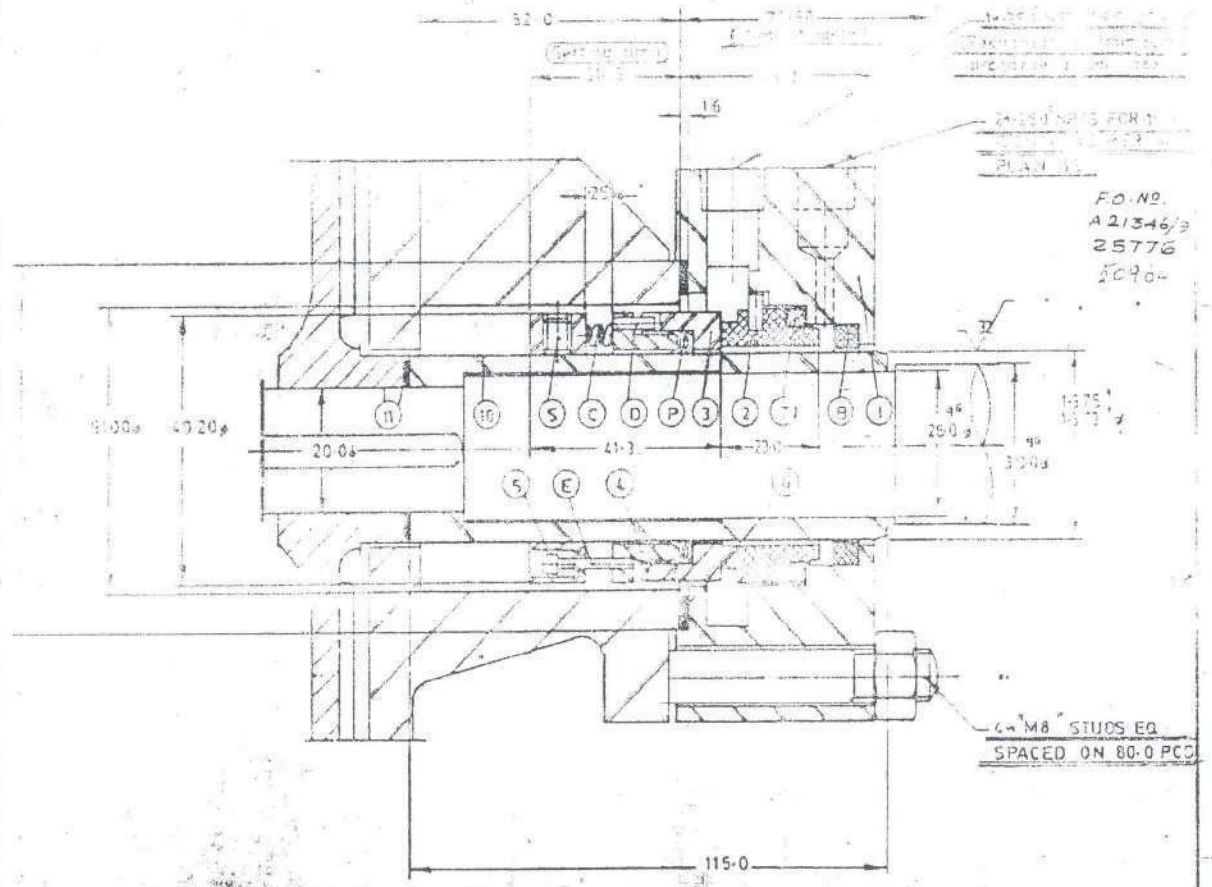

2		ALLOY 20	MKAX 8840 403	1
4		DURAFLON	PT3M 375 333	1
5		DURAFLON	MT 34 2500A03	
9		ALLOY 20	MKAX 8840 312	1
6		ALLOY 20	MKAX 8840 301	1
8		15 CARBON	Y53A1375 AA3	
11	SLEEVE PKG.	G.F.D.	1H-30786	1
10	SLEEVE	316 SS	EEKAH 230821	1
7A	INSERT MTG.			
7B	INSERT MTG.	DURAFLON	PT3T1750 A33	1
8A	INSERT MTG.			
8B	INSERT MTG.			
5	COLLAR	316 ST.STEEL	LE3C 1375 333	1
3	COMB. RING	316 ST.STEEL	NE3N 1375 333	1
2A	SEALRING INNER			
2	SEALRING OUTER	JUNG CARBON	KEUR 1375 333	1
2B	INSERT INNER			
1	INSERT OUTER	15 CARBON	Y5FJ 1375 LZ3	1
9	GLAND RING AP 2013	316 SS	1H-35530	1
	NOMENCLATURE	MATERIAL	PART DWG. NO/CODE	QTY.

RECOMMENDED SPARE PARTS

ALL DIMENSIONS IN MM UNLESS OTHERWISE SPECIFIED

H.O.C. Phenol.

ORDER NO. 486/87 DT. 17-12-87 ITEM No. 11

PUMP TYPE & SIZE	PUMP ITEM NO	PUMP SERIAL NO	REFERENCE DRAWING NO	FLUID	PRESSURE KG/CM² SUCT	PRESSURE KG/CM² DISCH	H.P.M	TEMP °C	SP.GR
Khimline 06 80-200	P6501		A3-853	Benzene	-	3.52		30°C	0.800 to 0.865
	P3001 A/B			Hydro-Carbon	0.35	2.81		60°C	0.826
	P3002 A/B			Hydro-Carbon	0.98	2.45		75°C	0.848

1	22.10.88	INSERT CHANGED FROM L33 TO L23
No.	DATE	REVISION

DURACERAM TYPE — SIZE: 1.375"

SINGLE INSIDE ROTT

MAT'L CODE: E M 5 E 5/N T T

ORDER PARTS BY B.M. NO		SCALE	2
F.O. NO	A19303/8	DRAWING NUMBER	REV.
DATE	28.11.87	2H-33231	1
DRN	CHKD		
FORM			

NO.	DATE	REVISION

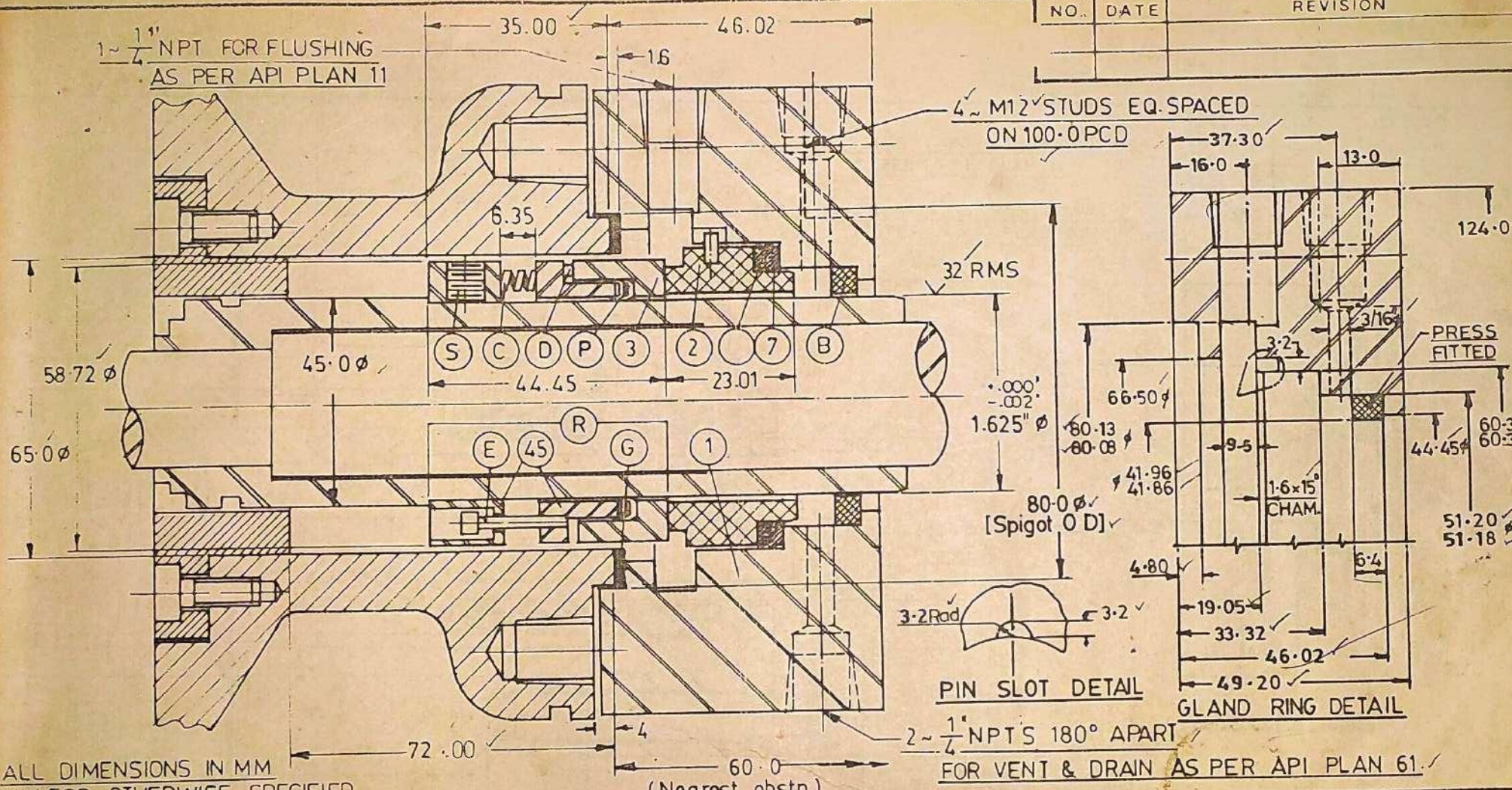

BUYER: KIRLOSKAR BROTHERS LTD.,
P.O. NO: 714142 DT: 2.6.84
ITEM NO: 3004A/B, 3005A/B, 3501A/B
USER: H.O.C. (Phenol) COCHIN
EQUIP: KIRLOSKAR PUMP KPD 40/32 Ref: C-137-059-D NO:
FLUID: Hydrocarbon SP. GR.: .846, .858, 1.008 PRESS. SUCT: 0.8 - 0.99 kg/cm² DISCH: 10.10 kg/cm², 10.59 kg/cm² & 10.06 kg/cm² TEMP: 38°C & 40°C.

R	ROTARY UNIT CONSISTING OF		1	GLAND RING	BY CUSTOMER
3	SEAL RING	TUNG. CAR. M.	2	INSERT	#5 CARBON
45	COMP. UNIT	316 SS	7	V-RING	DURAFLON
C	SPRINGS	20 SS			
D	DRIVE PINS	20 SS	G	GASKET	BY CUSTOMER
E	SPRING PINS	20 SS	P	SHAFT PKG.	DURAFLON
S	SET SCREWS	20 SS	B	THROTTLE BUSH	BY CUSTOMER

RECOMMENDED SPARE PARTS: 2, 3, 7, , C, B, P & S

DURA SEAL TYPE — SIZE: 1.625"

SINGLE INSIDE RO-TT

MAT'L CODE	E	M	5	-	-	T

ORDER PARTS BY B/M NO.

F.O. NO: S 10788 4 — SCALE:

DATE 5 - 4 - 84 — DWG. NO. 1H-25038

DWN: CHK'D.

FORM:

50

2.125 x 25.66

3006

No.	DATE	REVISION

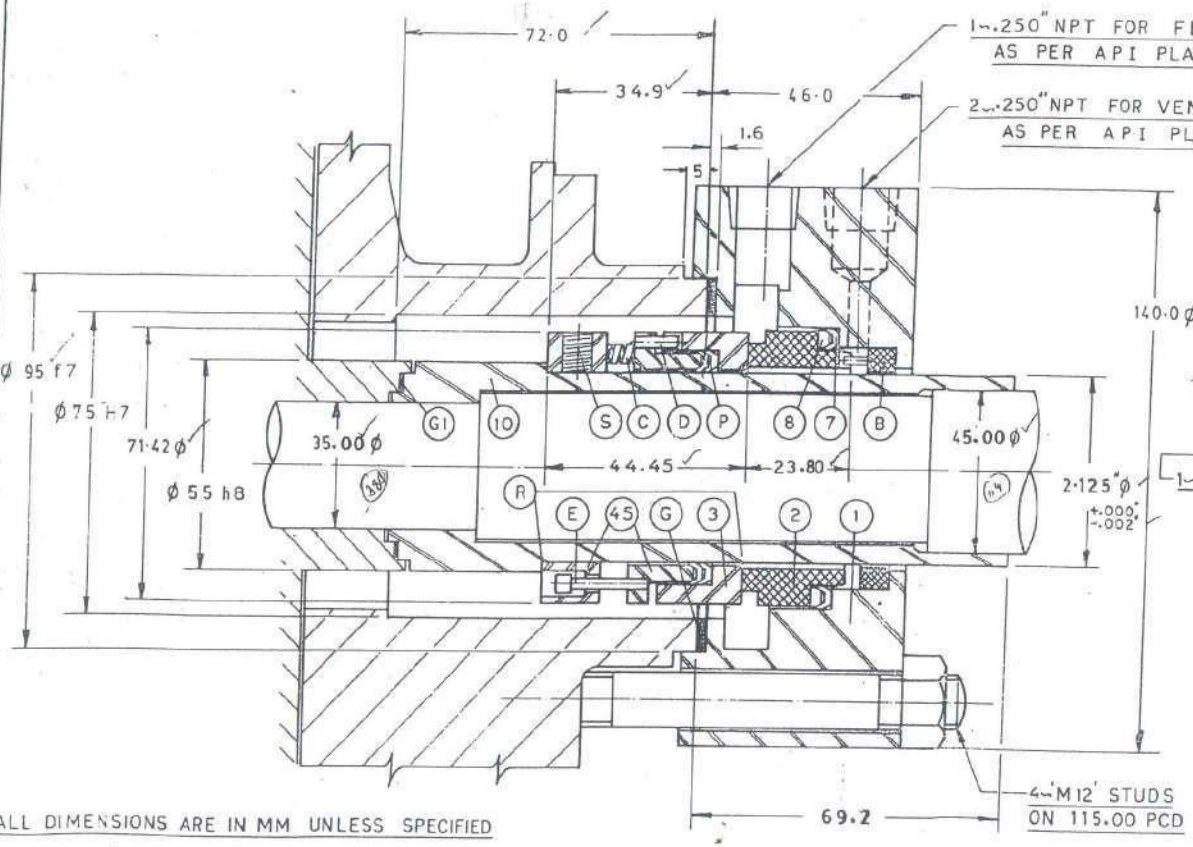

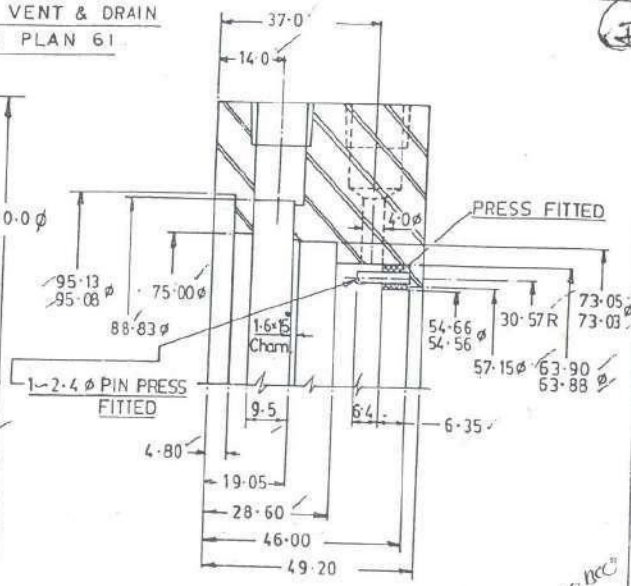

GLAND RING DETAIL

Drawing No. 35546 REC

ALL DIMENSIONS ARE IN MM UNLESS SPECIFIED

R	ROTARY UNIT	CONSISTING OF:	1	GLAND RING	BY CUSTOMER
3	SEAL RING	TUNG. CAR. 'M'	2	INSERT	#5 CARBON
45	COMP UNIT	316 ST STEEL	7	V-RING	DURAFLON
C	SPRINGS	ALLOY 20	8	SPREADER RING	DURAFLON G.F.
D	DRIVE PINS	ALLOY 20	P	SHAFT PKG	DURAFLON
E	SPRING PINS	ALLOY 20	G	GASKET	BY CUSTOMER
S	SETSCREWS	ALLOY 20	B	THROTTLE BUSH	BY CUSTOMER
			10	SLEEVE	BY CUSTOMER
			G1	SLEEVE GASKET	BY CUSTOMER

RECOMMENDED SPARE PARTS 2,3,7,8,C,S,G,P,S.

BUYER K.S.B. PUMPS LTD.

ORDER No:

USER H.O.C [Phenol]

PUMP TYPE & SIZE	PUMP ITEM No.	PUMP SERIAL No.	REFERENCE DRAWING No.	FLUID	PRESSURE SUCT.	PRESSURE DISCH.	R.P.M.	TEMP	SP.GR.
KSB CPK cm 65/315	3006 A/B		IW 51756	HYDRO-CARBON	-0.99 KG/CM²	10.92 KG/CM²		53°C	0.991

DURA SEAL TYPE SIZE :- 2.125"

INSIDE RO-TT

MATL CODE E M 5 — — T T

ORDER PARTS BY B/M No.

F.O No.

SCALE

DATE 5-4-84

DWG No 2H-25040

DWN KSM CHKD

FORM

PO No 395/30062/96

No.	DATE	REVISION
1	16.8.94	MAT'L CODE WAS EASE F/OFF
2	28.5.96	52.37, 26.2 DIMN. WAS 55.55, 23.01.

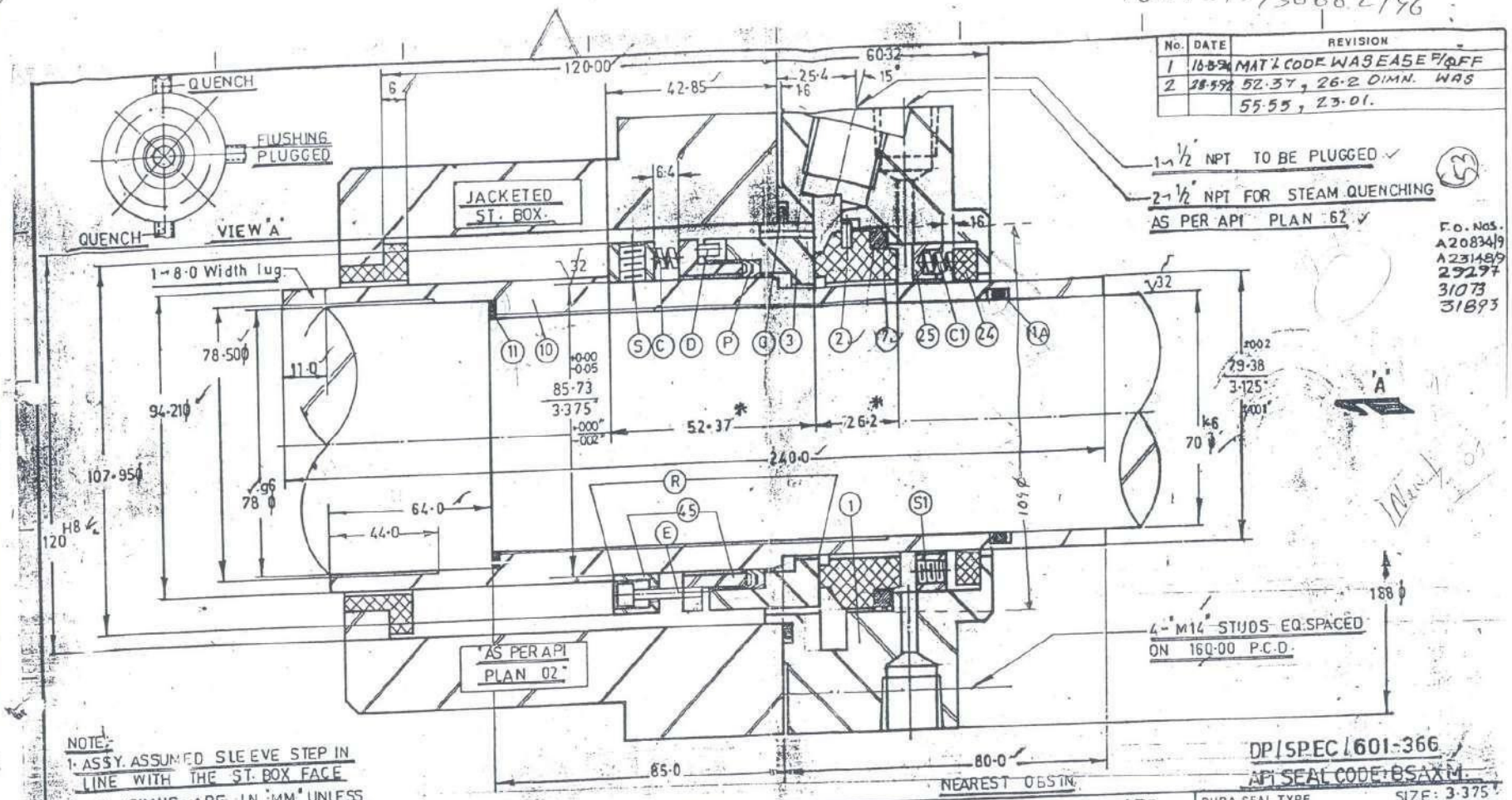

NOTE:
1. ASSY. ASSUMED SLEEVE STEP IN LINE WITH THE ST. BOX FACE
2. ALL DIMNS. ARE IN 'MM' UNLESS OTHERWISE SPECIFIED.

R	ROTARY UNIT CONSISTING OF:		1	GLAND RING	316 S.S.
3	SEAL RING	TUNG. CAR 62-6	2	INSERT	#5 CARBON
45	COMP UNIT	316 ST. STEEL	7	DURAFLEX.	DURAFLON
C	SPRINGS	20 S.S.			
D	DRIVE PINS	20 S.S.	P	SHAFT PKG	DURAFLON
E	SPRING PINS	20 S.S.	10	SLEEVE	316 S.S
S;S1	SET SCREWS	20 S.S.	11	SLEEVE GKT	KLINGRITE
24	FLOATING BUSH	#5 CARBON	11A	SLEEVE PKG	VITON
25	EXP. COLLAR	316 S.S.	C1	SPRINGS	20 SS

RECOMMENDED SPARE PARTS: 2, 3, 7, 11, 11A, 24, C, C1, G, P, S&S1.

BUYER: Bharat Pumps & Compressors LTD
ORDER No 461/1679024/382 DT. 10.7.84 ITEM: 3
USER: H.O.C. (PHENOL)

PUMP TYPE & SIZE	PUMP ITEM No.	PUMP SERIAL No.	REFERENCE DRAWING No.	FLUID	PRESSURE SUCT.	PRESSURE DISCH.	R.P.M.	TEMP °C	SP.GR.
KSMK VI 10x14x24	P6001 A/B		DFSPEC/601-332 & 2H-21139 R3 & 2H-23702R1	THERMEX	Kg/cm² 4.0 to 5.8	Kg/cm² 12.4	1450	38° TO 267°C	1.05-.845
					BOX PRESSURE 6.0 Kg/cm²				VISC 270 to 0.360

DURA SEAL TYPE: SINGLE INSIDE 'PT'
SIZE: 3.375"
MAT'L CODE: E U 5 E F/O T T
ORDER PARTS BY B/M No
F.O. No.: S 11299/5
DATE: 26.5.84
DWN: CHK'D:
FORM:
SCALE:
DWG. No. 2H-25405R2

DP/SPEC/601-366
API SEAL CODE: BSAXM

(48)

PRODUCT CODE :
FM 9011613G

PROPOSAL
FINAL

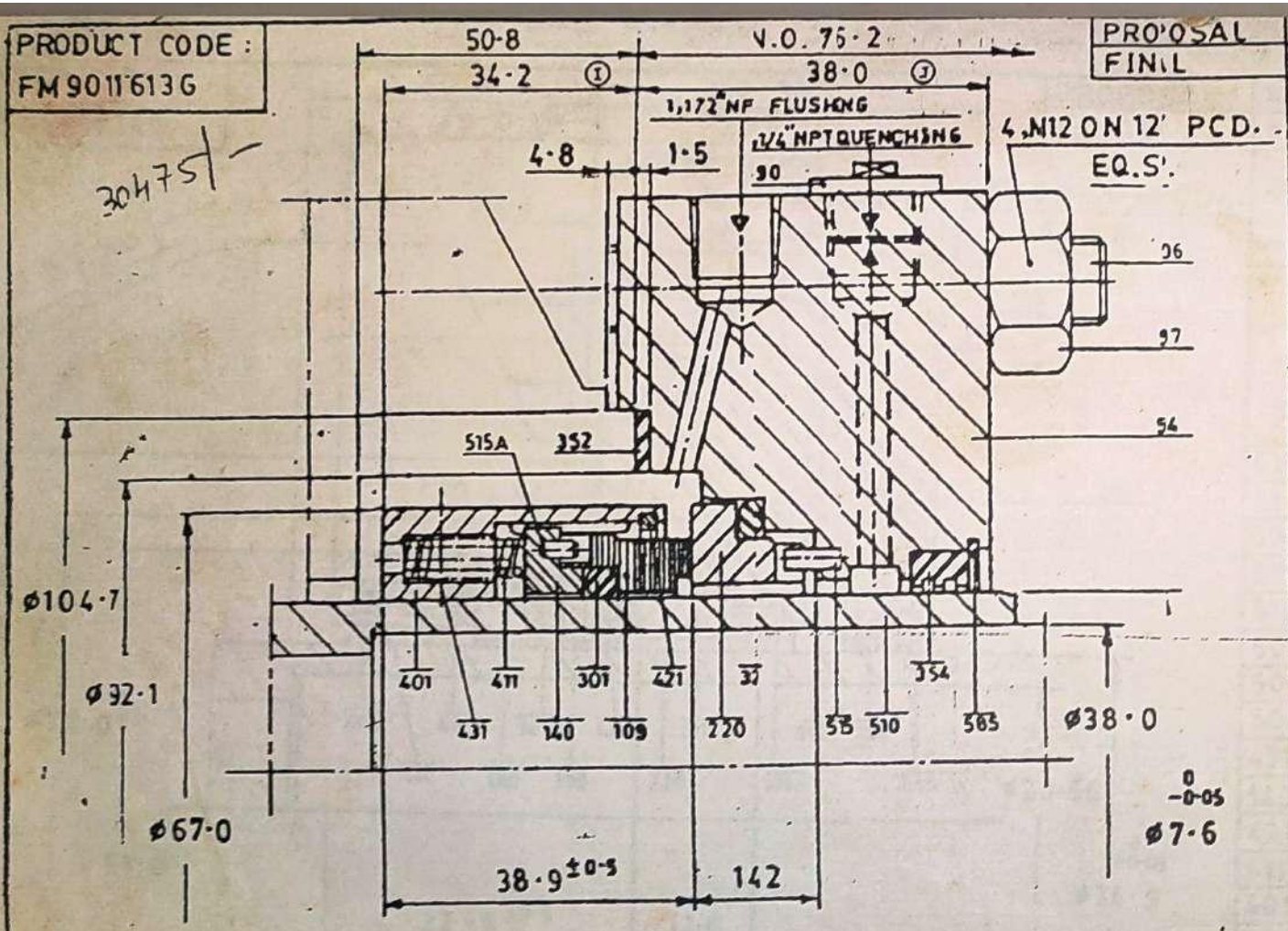

30475/-

REV	DETAIL	SIGN
III	PART NO. 154 MOC GFT WAS CFT.	SKJ 2
II	PART NO 354 MOC CFT WAS SS 316	SKJ 2
I	DIMNS. 34·2 ¶ 38·0 WAS 31·8 ¶ 42·0 ¶ PART NO 35 MOC SS 316 WAS CFT.	

SPECIAL NOTE:

NOTES
6) CLIENT TO CONFIRM DIMNS MARKED THUS ⊙
5) CLIENT TO GIVE DIMNS MARKED THUS ↓
4) CLIENT TO MAINTAIN DIMNS MARKED THUS ★
3) RECOMMENDED SPARES MARKED THUS ♦
2) NA = NOT AVAILABLE
1) ALL DIMENSIONS ARE IN mm UNLESS SPECIFIED

API 610 PLA
11/61

PART	DESCRIPTION	QTY.	CODE	MATL OF CONS
515B	LOCK PIN	1	I	SS 316
510	SLEEVE	1	—	CUSTOMER'S SCOP
590	PLUG	2	I	SS 316
585	SNAP RING	1	I	SS 316
515	LOCK PIN	2	I	SS 316
507	NUT	4	-	CUSTOMER'S SCOP
506	STUD	4	-	CUSTOMER'S SCOP
504	GLAND	1	I	SS 316
431	GRUB SCREW	4	I	SS 316
140	S.R. SPACER	1	I	SS 316
421	SNAP RING	1	I	SS 316
411	SPRING		I	SS 316
401	RETAINER	1	I	SS 316
354	THLE BUSH	1	F	GFT
352	GASKET	1	L	PTFE
321	O-RING	1	V1	FEP COVERED VITON
301	O-RING	1	V1	FEP COVERED VITON
220	MATING RING	1	U	SiC
109	SEAL RING	1	U	SiC

MATERIAL CODE	V1	U	I	U	I

PUMP/EQPT	MICROFINISH 2K	SEAL TYE	901U
TAG NO.	33-P-01 A/B	RE DRG NO	
FLUID	DEMIN WATER	SU PR	
		DISPR.	6·67 bar
GR	1·0	VISCITY.	1·0 cp
SIZE	1875"		
BUYER	MICROFINISH PUMP PVT.		
PO/ENQ. NO.			
USER			

SCALE	NTS	DRG. NO	A42 4979
DRN.	CHKD		
DATE	SKJ		

SLEEVE & GL. RING ADDED VIDE S

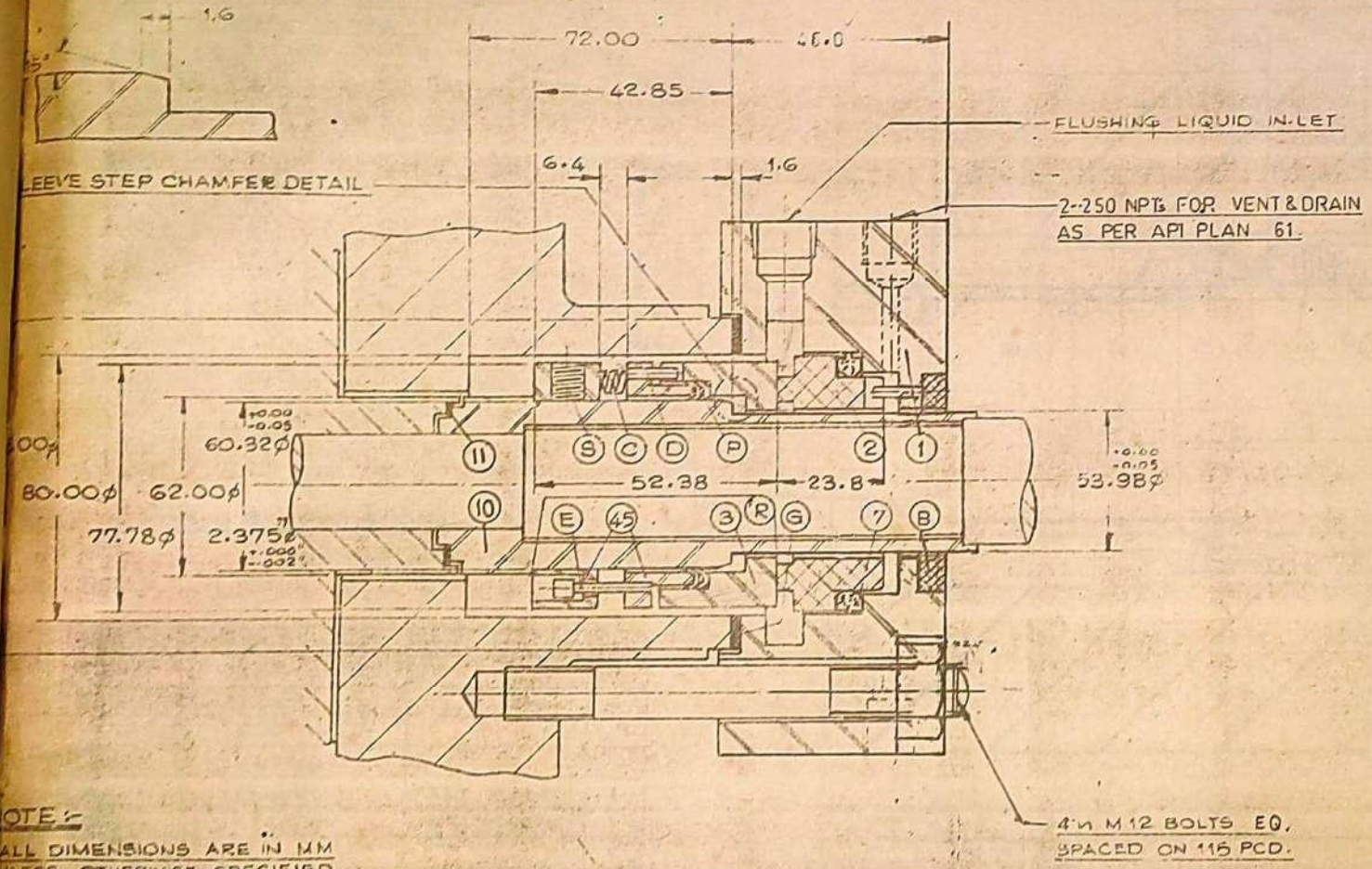

NOTE:-

ALL DIMENSIONS ARE IN MM
UNLESS OTHERWISE SPECIFIED.
ASSY. ASSUMED WITH SLEEVE STEP
LINE WITH FACE OF THE ST. BOX.

	ROTARY UNIT CONSISTING OF		1	GLAND RING	CUSTOMER
	SEAL RING	TUNG. CAR.	2	INSERT	#5 CARBON
	COMP. UNIT	316 S S	7	INSERT MTG.	DURAFLON
	SPRINGS	20 S S			
	DRIVE PINS	20 S S	P	SHAFT PKG.	DURAFLON
	SPRING PINS	20 S S	G	GASKET	CUSTOMER
	SETSCREWS	20 S S	B	THROTTLE BUSH	CUSTOMER
	SLEEVE	CUSTOMER			
	SLEEVE GASKET	CUSTOMER			

RECOMMENDED SPARE PARTS 2, 3, 7, 8, C, G, P, S.

H.O.C. Phenol

ORDER No

RPK
EM
50/400

101-P-
002
A/B

VISC.

~

Kg/cm² Kg/cm²

SIZE:- 2.

BALANCED INSIDE 'P

E 46 5 - -

24·11·87

2H-3322

ALL DIMNS. ARE IN MM
UNLESS OTHERWISE SPECIFIED.

API CODE - BSTFM

NO.	DATE	REVISION
R1	9-3-84	REVISED AS PER CUSTOMER'S COMMENT
R2	15.6.84	POSITION OF SETSCREWS (PART No. 13)
R3	27.1.85	Sealing was TUNG. CAR. M3

F.O. NOS.
A. 21346/9
50 9 64

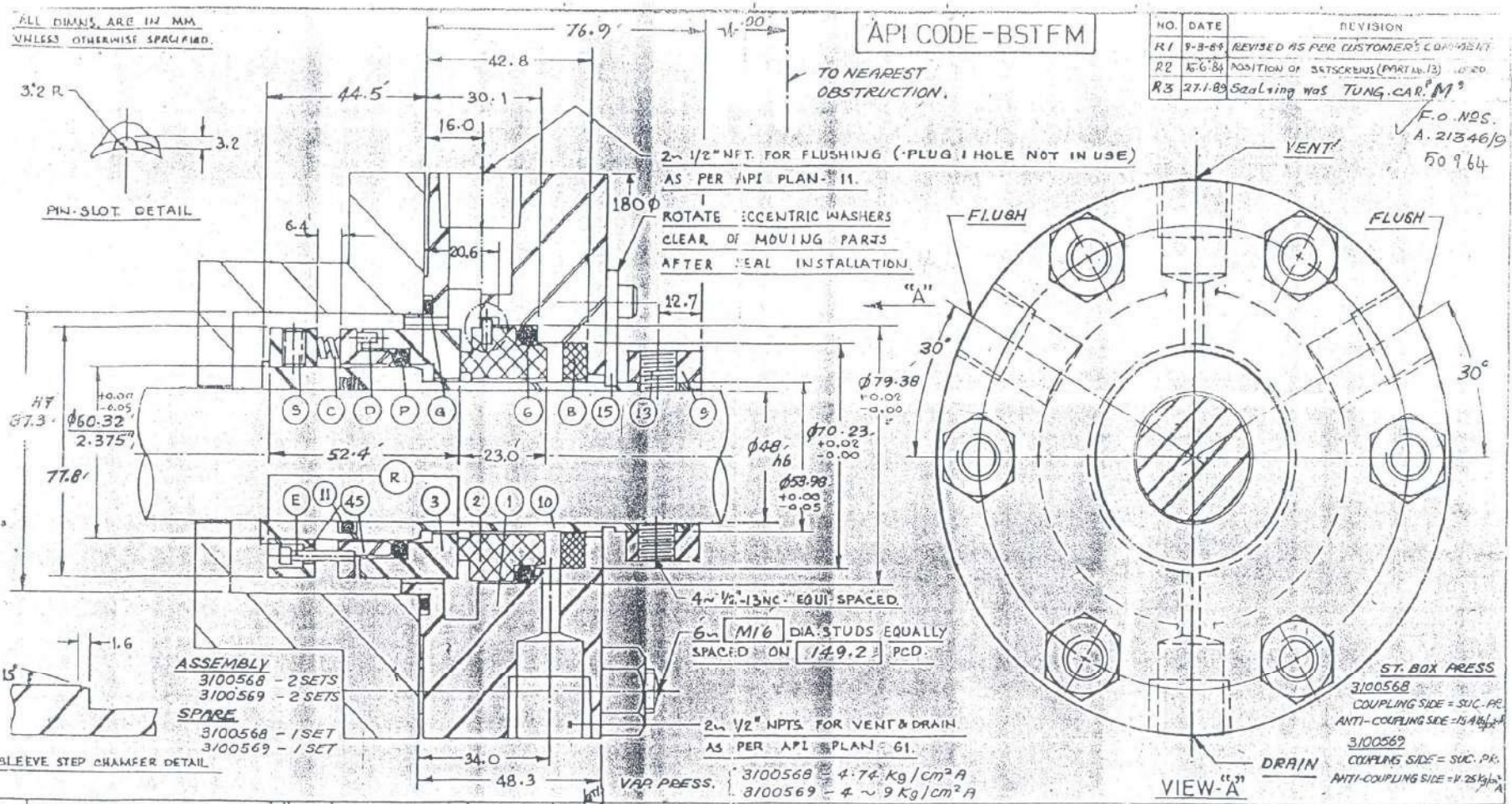

R.	ROTARY UNIT CONSISTING OF:		Qty	1	GLAND RING	316 SS ASTM A276	1
3	SEAL RING	TUNG CAR. 62-6	1	2	INSERT	#5 CARBON	1
45	COMP. UNIT	316 SS ASTM A276	1	6	'O'-RING	VITON	1
C	SPRINGS	20 SS	14	P	SHAFT PKG.	VITON	1
D	DRIVE PINS	20 SS	3	8	GASKET	VITON	1
E	SPRING PINS	20 SS	7	B	THROTTLE BUSH	BC2 (ASTM B584 C90)	1
S	SETSCREWS	20 SS	2	9	SLEEVE COLLAR	316 SS ASTM A276	1
13	SETSCREWS	410 SS (HARD.)	4	10	SLEEVE	SUS-403 (410 SS)	1
15	ECCENTRIC WASHERS	316 SS ASTM A276	2	11	SLEEVE PKG.	VITON	1

SPARE PARTS: (2, 3, 6, C, P, S, 11, G, E, 45, D & 10) ORIFICE: 1A-11952

BUYER:- DJK
ORDER No:-
USER:- HOCL/EIL

PUMP TYPE & SIZE	PUMP ITEM NO.	PUMP SERIAL NO.	REFERENCE DRAWING NO	FLUID	PRESSURE KG/CM² A SUCT	PRESSURE KG/CM² A DISCH	RPM	TEMP °C	SP. GR
DENGYO 3X4X13 3/4 HOS	3100568 102 Pc/No PO03	102-2-P-001	PD-84-197	LPG	4.9	21.9	3000	15° TO 45	0.554 TO 0.526
DENGYO 3X4X13 3/4 HOS	3100569	102-2-P-003 1/B	PD-84-198	CB-C4	4.0	18.5	3000	15° TO 45	0.58 TO 0.55

DURA SEAL TYPE: PTO CARTRIDGE
SIZE: 2.375
MATL CODE: E U 5 E F/V V
ORDER PARTS BY B/M NO.
F.O. No. 21346/9
DATE 15-3-84
DWN JC CHKD.
FORM
SCALE N.T.S.
DWG NO 2A-12526R3

16

A 21346/9

ENVIRONMENT CONTROL		LEGEND
A.P.I. PLAN	32	BLOCK VALVE
FLUSH FLUID	CLEAN LIQUID (WATER)	CHECK VALVE
FLUSH PRESS.	2 Kg/cm² ABOVE BOX PRESS	Y-TYPE STRAINER.
FLUSH TEMP	AMBIENT	FLOW REGULATING VALVE
FLUSH RATE	4 - 6 LPM	PI PRESS. GAUGE

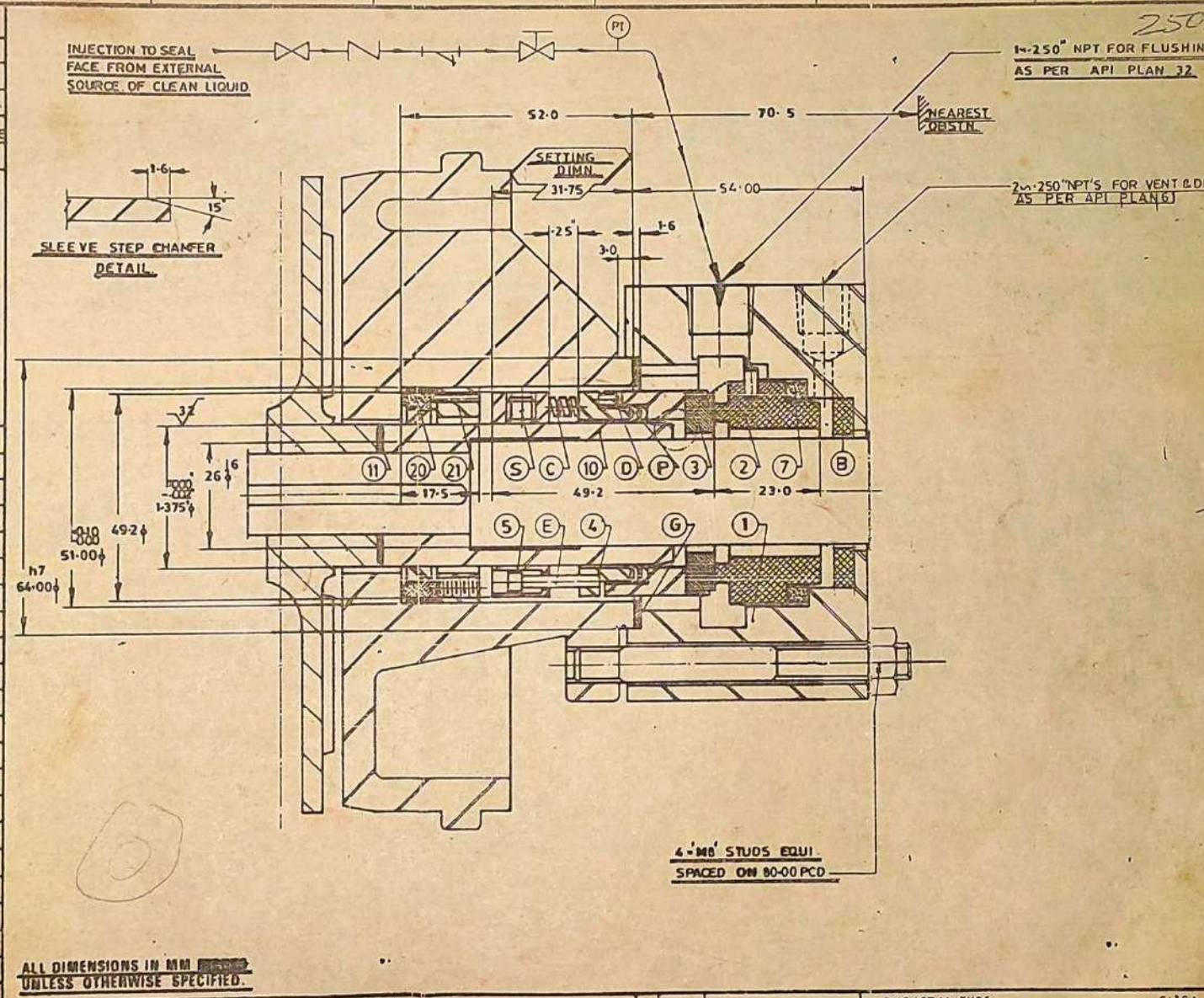

PART NO	NOMENCLATURE	MATERIAL	PART DRG. NO/CODE	QTY.
S	SET SCREW	ALLOY-20	MKAX8840403	2
PI	SHAFT PKG.			
P	SHAFT PKG.	DURAFLON	PT3M1375333	2
G	GASKET	BY CUSTOMER	——	1
E	SPRING PIN	ALLOY-20	MKAX8840217	4
D	DRIVE PIN	ALLOY-20	MKAX8840212	3
C	SPRING	ALLOY-20	MKAX8840301	8
B	TH. BUSH	BY CUSTOMER		1
21	EXPANSION COLLAR	BY CUSTOMER	——	1
20	LIP SEAL	BY CUSTOMER	——	1
11	SLEEVE PKG.	BY CUSTOMER	——	1
10	SLEEVE	BY CUSTOMER	——	1
7A	INSERT MTG.			
7	INSERT MTG.	DURAFLON	PT3T1750833	1
6A	INSERT MTG.			
6	INSERT MTG.			
5	COLLAR	316 ST.STEEL	LE3C1375333	1
4	COMP. RING	316 ST.STEEL	NE3N1375333	1
3A	SEALRING INNER			
3	SEALRING	TUNG CAR. M	KEMT1375333	1
2A	INSERT INNER			
2	INSERT	5 CARBON	YSFQ1375M33	1
1	GLAND RING	BY CUSTOMER	——	1

ALL DIMENSIONS IN MM
UNLESS OTHERWISE SPECIFIED.

BUYER: Khimline Pumps Ltd. THANE

ORDER NO:

USER: H.O.C. Phenol

PUMP TYPE & SIZE	PUMP ITEM NO	PUMP SERIAL NO	REFERENCE DRAWING NO	FLUID	PRESSURE KG/CM² SUCT	PRESSURE KG/CM² DISCH.	H.P.M	TEMP. °C	SP GR
Khimline assy-06	P2504 A/B			CUMENE WITH CHP 50 DCUM SALT, HYDRO CARBON	6-1	6-29		63°	·825
					LDX				VISC.

NO	DATE	REVISION

DURASEAL TYPE: Single Inside P
WITH LIP SEAL

SIZE:

MAT'L CODE: E M 5 _ _

ORDER PARTS BY B/M NO

F.O. NO

DATE: 23-11-87

DRN: CHKD:

FORM

SCALE: NT

DRAWING NUMBER: 2H-33235

ENVIRONMENT CONTROL		REMARKS
API PLAN	11	
FLUSH FLUID	PUMPED FLUID	
FLUSH PRESS	DISCHARGE PRESS.	
FLUSH TEMP	PUMPED FLUID TEMP	
FLUSH RATE	4 LPM	

F.O. NO. 50964

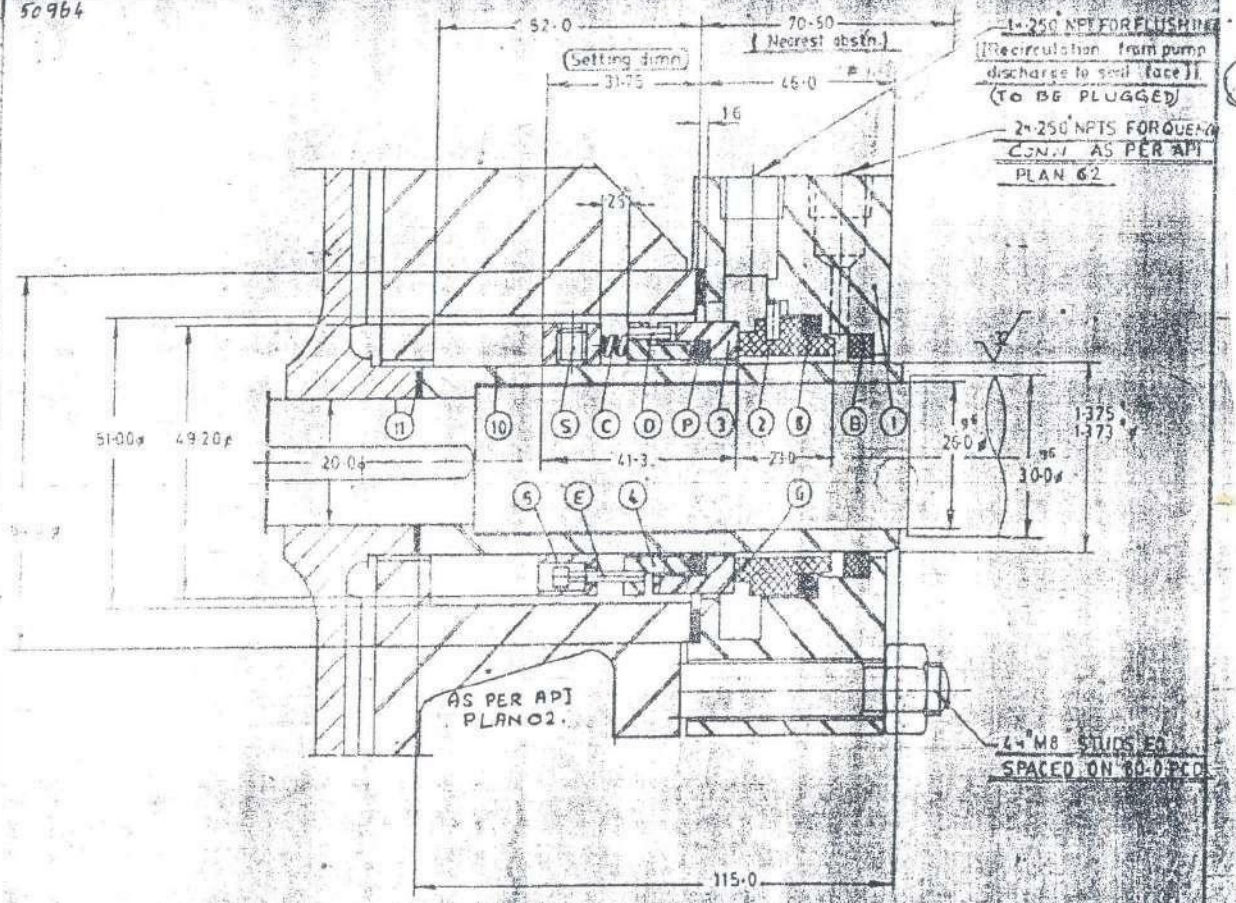

5	[illegible]	ALLOY 20	MKAX 88[illegible] 403	2
4	[illegible]	VITON	MVRR[illegible]	2
		DURAFLON	MT3-250 3405	
		ALLOY 20	MKAX [illegible]	
3	[illegible]	ALLOY-20	MKAX 88[illegible] 212	1
2	[illegible]	ALLOY-20	MKAX 88[illegible] 301	6
1	[illegible]	S CARBON	Y55A1375AAD	1
11	SLEEVE PKG	BY CUSTOMER.	—	1
10	SLEEVE	316 SS	EEKAH230821	1
7A	INSERT MTG.			
7	INSERT MTG.	DURAFLON		
6A	INSERT MTG.			
6	INSERT MTG.	VITON	MVSR1100 333	1
5	COLLAR	316 ST. STEEL	LE3C 1375 333	1
4	COMP RING	316 ST. STEEL	NE3N 1375 333	1
3A	SEALING [illegible]			
3	SEALING [illegible]	TUNG CARB.	KEMR 1375 333	1
2A	INSERT RING			
2	INSERT RING	S CARBON	Y5FJ 1375 LZ3	1
1	SEAL RING AP 8835	316 SS	1H-35530	1

ALL DIMENSIONS IN MM UNLESS OTHERWISE SPECIFIED.

H.O.C. Phenol.

PUMP TYPE & SIZE	PUMP SER. NO.	PUMP SPECIAL	REFERENCE DRAWING & NO.	FLUID	PRESSURE KG/CM SUCT.	PRESSURE KG/CM DISCH.	RPM	TEMP.	SP. GR.
Khimline 05 SS-160	P3007 A/B P3805 A/B		A3-853	WATER	— BOX	3·50		100°	0.958

1	22.11.82	INSERT CHANGED FROM 1.33 TO 1.73

DURASEAL TYPE [illegible] SIZE 1.375

SINGLE INSIDE RO

E/M S/E C/V V

CHIEF FABRICATOR DRG. NO. A21346/3 DATE 22.11.82

ZH-33239